GUILD ◆ EDITION

Woodsmith®

Woodsmith.com

Vol. 39 / No. 229

CLEVER, HARDWARE-FREE SHELVING SYSTEM

Special
Tool & Jig Issue

All-New Creative
Routing Techniques

Table Saw Tricks for
Cutting Plywood

Avoid These 5
Drill Press Mistakes

A Publication of Cruz Bay Publishing, Inc.

Woodsmith®

CREATIVE HOME GROUP
GENERAL MANAGER Donald B. Peschke
EDITORIAL MEDIA DIRECTOR Bryan Nelson
MANAGING EDITOR Vincent Ancona
SENIOR EDITORS Wyatt Myers, Phil Huber
ASSOCIATE EDITOR Robert Kemp
ASSISTANT EDITOR Erich Lage

EXECUTIVE ART DIRECTOR Todd Lambirth
SENIOR ILLUSTRATORS Harlan V. Clark, Dirk Ver Steeg, Peter J. Larson
SENIOR GRAPHIC DESIGNER Bob Zimmerman
GRAPHIC DESIGNER Becky Kralicek

CREATIVE DIRECTOR Ted Kralicek
ASSISTANT DESIGN DIRECTOR Chris Fitch
PROJECT DESIGNER/BUILDER John Doyle
CAD SPECIALIST Steve Johnson
SHOP CRAFTSMAN Dana Myers

SENIOR PHOTOGRAPHERS Crayola England, Dennis Kennedy
ASSOCIATE STYLE DIRECTOR Rebecca Cunningham
SENIOR ELECTRONIC IMAGE SPECIALIST Allan Ruhnke
PRODUCTION ASSISTANT Minniette Johnson
VIDEO EDITOR/DIRECTOR Mark Hayes

Woodsmith® (ISSN 0164-4114) is published bimonthly by Cruz Bay Publishing, Inc., 2200 Grand Ave, Des Moines, IA 50312.
Woodsmith® is a registered trademark of Cruz Bay Publishing.
Copyright© 2017 Cruz Bay Publishing, Inc. All rights reserved.
Subscriptions: Single copy: $6.95.
Canadian Subscriptions: Canada Post Agreement No. 40038201. Send change of address information to PO Box 881, Station Main, Markham, ON L3P 8M6. Canada BN 84597 5473 RT
Periodicals Postage Paid at Des Moines, IA, and at additional offices.
Postmaster: Send change of address to *Woodsmith*, Box 37274, Boone, IA 50037-0274.
Printed in U.S.A.

WoodsmithCustomerService.com

ONLINE SUBSCRIBER SERVICES

- **VIEW** your account information
- **RENEW** your subscription
- **CHECK** on a subscription payment
- **PAY** your bill
- **CHANGE** your mailing or e-mail address
- **VIEW/RENEW** your gift subscriptions
- **TELL US** if you've missed an issue

CUSTOMER SERVICE Phone: 800-333-5075 weekdays

SUBSCRIPTIONS
Customer Service
P.O. Box 842
Des Moines, IA 50304-9961
subscriptions@augusthome.com

EDITORIAL
Woodsmith Magazine
2200 Grand Avenue
Des Moines, IA 50312
woodsmith@woodsmith.com

ACTIVE INTEREST MEDIA

CHAIRMAN **Effrem Zimbalist III**
PRESIDENT & CEO **Andrew W. Clurman**
EXECUTIVE VICE PRESIDENT & CHIEF FINANCIAL OFFICER **Brian J. Sellstrom**
EXECUTIVE VICE PRESIDENT, OPERATIONS **Patricia B. Fox**

from the editor

Sawdust

We always try to present a wide range of projects in *Woodsmith* magazine to ensure there's something for everyone. But when it comes to projects I'm drawn to, they almost always fall into the category of "classic," "timeless," or "heirloom." I suppose that's because I'm getting older, and they just seem right to me. Honestly, though, it's because those types of projects have a longevity that appeals to me.

For example, the card catalog featured on page 42 takes me back to the ones at my school library. I'd spend countless hours thumbing through the cards inside each catalog to find just the right book to read. Or I'd use the cards inside to direct me to needed information in order to write a research paper for my composition class. Every drawer was like a treasure map to something new.

Alas, all my searches at the library these days simply consist of typing information into a computer for a lightning fast result — very little chance of veering off onto any new adventures. Today, old card catalogs are showing up in many homes, being repurposed for other uses. I'll admit they look great in this new role, but that makes finding one a bit of a challenge. To solve that problem, we designed one you can build in your own shop. From the outside, we made sure to maintain the look of a traditional card catalog. But instead of recreating all of those small drawers, which don't address modern-day storage needs, we opted for larger drawers. Don't worry, though, we kept of few of the small ones, too.

You'll find a great selection of other projects, technique articles, and tips in this issue, as well. The jig for routing bowls (page 18 and photo above) is well worth checking out. It gives you the ability to create unique, one-of-a-kind projects without a lot of effort. The workstation on page 36 features a simple, yet strong design making it useful around the shop, house, or even outdoors. And the outfeed table on page 24 is a must-have. Besides giving your back a break any time you have to deal with cutting heavy, awkward sheets of plywood or MDF at your table saw, it also doubles as an extra worksurface when you need it. And did I forget to mention that it's mobile, as well?

Bryan

contents

No. 229 February/March 2017

Projects

weekend project

Unique Routed Bowl Jig 18

Want to make a bowl but don't have a lathe? No problem. By building a simple router jig and templates, you can accurately shape the inside and outside curves of a solid-wood bowl.

shop project

Ultimate Outfeed Table 24

Breaking down sheet goods is a challenge. This mobile table saw lift minimizes the hassle by making it a snap to do it quickly and safely. Plus, it provides storage and an extra worksurface.

designer project

Knock-Down Shelving System 30

Contrasting materials and a stylish design give this shelving system a great look. But the hardware-free, knock-down design means you can easily move it and set it up in minutes.

shop project

Heavy-Duty Shop Workstation 36

No matter what the task at hand is, this workstation can be set up or taken down in minutes. Optional accessories provide expanded capability to make it even more versatile.

heirloom project

Classic Card Catalog Cabinet 42

The classic appearance of a card catalog is unmistakable. While this one looks traditional, there's a secret — extra-wide drawers that provide more useful storage to meet your needs.

Departments

from our readers
Tips & Techniques 5

all about
Latches & Catches 10

router workshop
Custom Carved Panels 12

great gear
Powermatic Tenoning Jig 14

woodworking technique
Flattening a Board 16

woodworking technique
Pocket Hole Joinery Basics 52

working with tools
5 Drill Press Mistakes to Avoid . . 56

in the shop
Our Favorite Cordless Tools 58

woodworking essentials
Brushing on a Finish 60

mastering the table saw
Cutting Sheet Goods 62

tips from our shop
Shop Notes 64

questions & answers
Choosing the Right Bit 66

from our readers

Tips & Techniques

Double-Duty Drawers

Large, deep drawers in cabinets seem to waste a lot of space. In the past, I would just dump loosely associated tools into one of these drawers, only to spend time rooting around in the drawer looking for the item I needed later. That item, of course, was underneath everything else.

It occurred to me that I could reclaim some of this dead space by adding a pair of slide-out trays to the top of the existing drawer box. As the photo shows, this is done by flipping the direction of these additional trays and slides.

I started by cutting a pair of notches in the sides of the drawer and sanding the opening smooth. Then, as the drawings show, I built a pair of trays that open to the sides. This gives you maximum control over the space you have available. When sizing the parts of each tray, remember to account for the thickness of the drawer slides.

Fred Adams
Henderson, New York

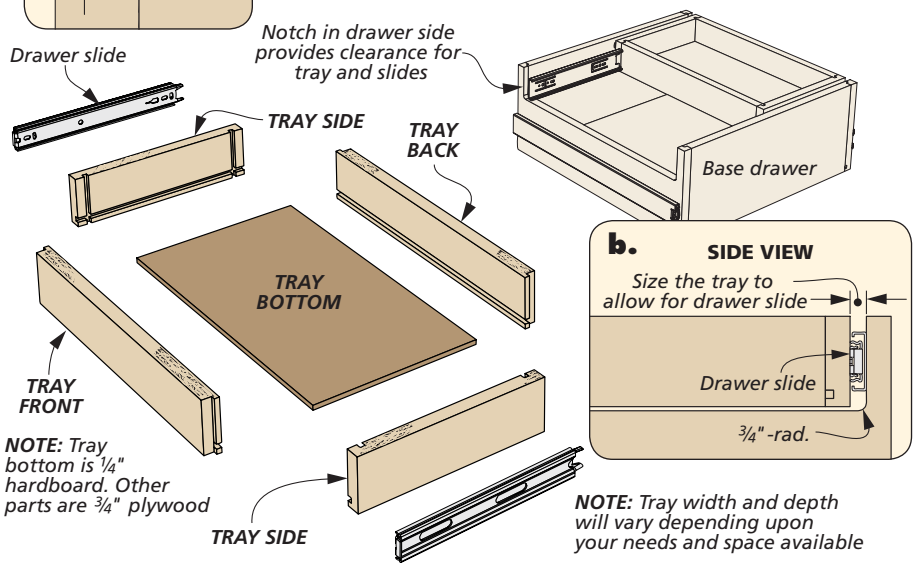

Win This Forrest Blade

Simply send us your favorite shop tips. If your tip or technique is selected as the featured reader's tip, you'll win a *Forrest Woodworker II* blade. To submit your tip or technique, go to *Woodsmith.com/magazine* and click on the link, "SUBMIT A TIP" at the bottom of the page. There you can upload your tips and photos for consideration.

The Winner!

Congratulations to Fred Adams, the winner of this *Forrest Woodworker II*. To find out how you can win this blade, check out the information at left.

Crosscutting Long Panels

Plywood panels can be tricky to crosscut. Even when using a crosscut sled, it's hard to keep enough pressure on the piece and make an accurate cut at the same time. The material wants to lift away from the blade.

A nice solution only requires a couple of roller stands and a 2x4. The two stands along with the 2x4 are adjusted to the height of your sled. The weight of the panel clamped to the 2x4 allows the whole assembly to glide across the rollers smoothly.

Michael Cyr
Westport, Massachusetts

Magnetic Router Table Upgrade

My laminate-topped router table lacks a miter gauge slot. This is a problem when I want to use a featherboard for some precise milling. I've tried clamping a shop-made featherboard to the top, but often it would shift when in use.

Recently, I received a magnetic featherboard as a gift. I love it and use it all the time at my table saw and jointer. Once it's positioned, the large knobs on the top of the featherboard turn the magnets on and off.

To use it on my router table, all it took was a piece of sheet metal clamped to the front of the table. Once my fence and board was in place, I positioned the featherboard properly against the board and turned on the magnets.

Hermie Tolerba
Sugar Land, Texas

QUICK TIPS

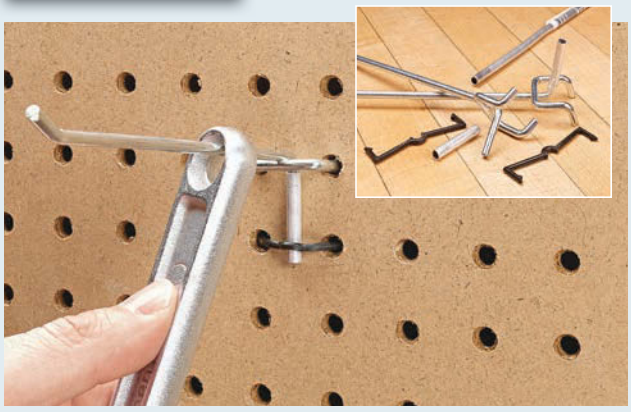

Peg Hook Extensions. *Jerry Renken* of *Spokane, WA,* prevents his long pegboard hooks from lifting out by first placing an aluminum tube (3/16" x .014") over the center peg. This gives the hook enough length that a peg lock strap can be used to keep everything in place.

Precise Epoxy Mixing. *Phil Huber* of *Urbandale, IA,* uses graph paper to measure his epoxy. Matching the volume of resin and hardener is just a matter of matching the size of the puddles of each. The graph paper gives a good visual reference and can be used multiple times.

Dead-On Stop Block

Projects often require multiple pieces cut to the same length. And the best way to accomplish this is to set a stop block. For setting a stop block on my miter saw, I use an old radial arm saw trick that my uncle showed me years ago. It works just as well today.

As the photos below show, all you have to do is make a partial cut in a scrap that's clamped to the fence (on the opposite side of the stop block setup). Then, hook your tape in that kerf to locate and clamp the stop block. This "live" kerf cut is a more accurate reading of the blade location, rather than just bumping the end of your tape into the blade.

Harry Larrison
Spokane, Washington

▲ Cut a shallow kerf into a scrap that's clamped to the saw fence. Do not cut all the way through the piece.

▲ Hook your tape measure into the kerf created by the blade. Then position the stop block and clamp it in place.

▲ Remove the scrap that was clamped to the miter saw. Now you can use the setup to make as many repeat cuts as needed.

Making Half-Round Dowels

A recent project that I was working on called for a couple of half-round, decorative accents. After some head scratching, I came up with the idea of using dowels, leftover lumber, and my planer to create what I needed.

The process starts by cutting two V-grooves in a piece of scrap lumber. This creates a sled to carry the dowels through the milling process. I drew a line on the end of the dowels that represented the stopping point.

As you can see in the inset photo, I used my hot glue gun to tack the hardwood dowels into the grooves. After planing the dowels to the proper thickness, I pried them off the sled and trimmed them to final length.

Steven Davey
Ellicott City, Maryland

▲ As long as tearout is not an issue, you can take some pretty deep passes in the early stages of planing. Take lighter passes when you get closer to the finished size.

DIGITAL WOODSMITH

SUBMIT TIPS ONLINE

If you have an original shop tip, we would like to hear from you and consider publishing your tip in one or more of our publications. Jump online and go to:

Woodsmith.com/magazine
and click on the link at the bottom of the page,
"SUBMIT A TIP"

You'll be able to tell us all about your tip and upload your photos and drawings. You can also mail your tips to "Woodsmith Tips" at the editorial address shown on page 2. We will pay up to $200 if we publish your tip.

RECEIVE FREE ETIPS BY EMAIL

Now you can have the best time-saving secrets, solutions, and techniques sent directly to your email inbox. Just go to:

Woodsmith.com
and click on,
"Woodsmith eTips"

You'll receive one of our favorite tips by email each and every week.

Table Saw Accessory Cabinet

I recently upgraded from my contractor's saw to a cabinet saw. I love how smooth the saw runs. There was just one downside to the deal, and that was losing the mobile storage stand that my contractor saw was mounted to.

Needing to store all the things that were previously stored in the stand, I designed and built a wall-mounted version that accomplishes the same thing.

As you can see in the photos, the door of this cabinet is where I hang my standard table saw blades. Inside, I store my dado set, arbor wrench, and other tools. Push sticks and other accessories can sit on the shelves.

The door and the cabinet are identical in size and depth. The panel in the door is centered, and the cabinet back is inset slightly to allow space for beveled wall cleats. Spacers are added to the panels to hold the blades away from the surface. The blades are held in place with wing nuts as shown in detail 'b' below.

Kerry Maletsky
Monument, Colorado

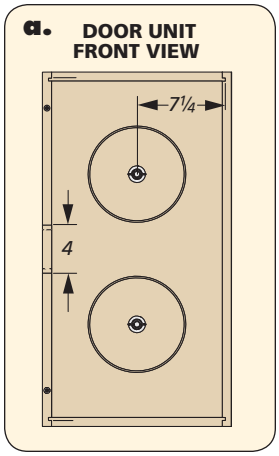

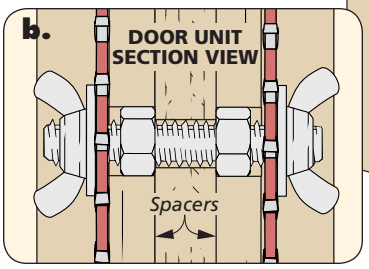

NOTE: Rabbet door and cabinet sides 1/16" to install hinge

NOTE: Panel on door unit is centered front to back. Back panel on the wall unit is inset ¾" from the back edge

Continuous hinge

TOP

3⅝

14½

¼

¾

#8 x 3" Fh woodscrew

14

1¾

2½

WALL CLEATS

#8 x 1¼" Fh woodscrew

½"-13 x 2½" carriage bolt

½"-13 x 3¼" threaded rod

½" wing nut and washer

LARGE SPACERS (8"-dia.)

DOOR PANEL

¾

½"-13 x 3¼" threaded rod

⅜" -rad.

½" nut

#4 x ½" Fh woodscrew w/ ½" washer

NOTE: All dadoes are ¼" deep

NOTE: Cabinet top and base are mirror images

29½

¾

½

¼

SIDE

SMALL SPACER (6"-dia.)

⅞" centered hole

½" wing nut and washer

2¼" L-hook

14½

6¼

5¾

3

2½

16½

28½

5

SIDE

BACK PANEL

2⅛

14½

SHELF

6

¼

½

3⅝

BASE

⅜" rare-earth magnet w/½" cup and #4 x ½" Fh woodscrew

NOTE: Lower cleat secured to wall. Upper cleat is screwed to panel

14

3

WALL BRACE

½"-dia. counterbore, ⅜" deep

NOTE: Spacers are ½" plywood. All other parts are ¾" plywood

T-Track Accessory Storage Block

Stop blocks and hold-downs are everywhere in my shop. Most of the time, they're piled away in a drawer not anywhere close to where I normally use them. I had some leftover pieces of T-track, so instead of tossing them, I put them to good use.

I created a custom storage block for each of the tools that use the hold-downs. In the photo here, you see the one I installed at my router table. I simply cut a groove in a scrap block and attached the T-track to it. Then I screwed it to the front apron of my router table where the hold-downs and stop blocks are tucked away, but close at hand.

I also made a couple of small blocks for either side of my drill press, as well. But there, I used rare-earth magnets on the back side of the mounting blocks to hold them in place.

Lem Greer
Loveland, Colorado

QUICK TIPS

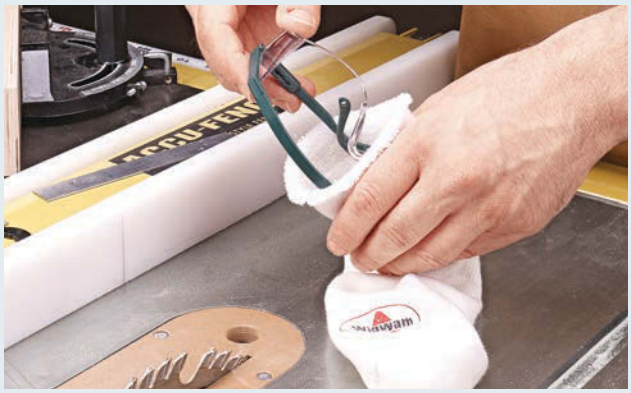

Sock for Safety Glasses Storage. *John Doyle* from *Ankeny, IA,* has found a way to keep his shop glasses from getting dusty. He stores them in an old (but clean) sock. This has the added benefit of protecting the glasses from being scratched if they get knocked off the workbench.

Benchtop Hand Sander Block. *Scott Johnson* of *Pacific Grove, CA,* takes small parts to the sanding block, not the other way around. He made a simple MDF block and cleat that has a hardwood dowel in the underside to lock it in place. Then he sticks his sandpaper of choice to the block.

Bucket Recycling. Seeing an opportunity, *James Bradley* of *Oceanside, CA*, made use of an old five-gallon bucket for different tasks. Cutting just below the top structural rib leaves the bucket and handle intact. The remaining lid and cut section can be used as a basin to clean saw blades.

Sander Rest. *Dan Martin* of *Appleton*, *WI*, has a simple solution for an ongoing problem. Instead of waiting for his random orbit sander to stop, he sets it on a face-up piece of the same sandpaper. While the sander slows, the soft loop side of the paper won't harm the benchtop.

all about

cabinet door

Latches & Catches

Hardware selection is probably one of the most important aspects of any furniture project. But, when building a cabinet with a door, it's easy to get overwhelmed by the number of latches and catches that are available. As it turns out, it's not as hard as you might think to get the right hardware for your specific need. You just need to know what each individual piece is designed to accomplish.

An icebox latch is most commonly mounted to the door's frame, while the catch is mounted to the case's stile.

Here, I'll take a look at seven latches and catches that I've used a number of times over the years in my shop. I've grouped them into two categories — visible and hidden hardware. Check out Sources on page 67 to find out where you can buy any of these items.

VISIBLE LATCHES

The first group is the "visible" hardware category. These pieces of hardware can be used on cabinets that have inset doors and are easy to install on the surface of the door and the face frame stile.

Since this type of hardware often becomes a focal point on a project, they're available in many decorative styles that are designed to enhance the look of the door or cabinet rather than blend in. And even though they're all different, they all consist of similar parts: A receiver mounted on one side, and a latch component on the other side.

Attractive and simple to operate, the bar latch is best used for light-duty applications. They're easy to mount on several types of doors.

CUPBOARD LATCH. The cupboard latch is probably one of the most common latches available (main photo above),

and one I've used quite often. This latch is usually spring-loaded and locks in place with an audible click. Perhaps the nicest feature of a cupboard latch is the fact that it acts as a catch to hold a door shut, as well as a knob to hold on to when opening and closing the door. This eliminates the need for additional hardware.

BAR LATCHES. Even though they're most often associated with holding shutters closed, bar latches are also quite useful for smaller applications, like jewelry boxes and other small containers (right photo, previous page). Simple to use, they too will often have small knobs to grasp when opening.

ICEBOX LATCH. While predominantly used for restoration or reproduction iceboxes (left photo, previous page), this latch works for other applications, as well. They're generally sold for full overlay or offset doors.

▲ Magnetic touch latches are the perfect answer for utility and shop cabinets, as well as finer pieces of furniture. They're simple to mount to the interior surface of a frameless cabinet, while the washer is mounted to the inside of the door.

◄ A rare-earth magnet, cup, and washer is an inexpensive method for securing all types of cabinet doors.

HIDDEN HARDWARE

The next group of catches are designed to hold a door shut but be completely hidden from view. Some rely on magnets for their holding power, while others use spring-loaded components.

MAGNETIC TOUCH LATCH. Available for a single door or double doors (upper right photos), a magnetic touch latch requires no knob or pull on the exterior of the door to open and close. As the door is pushed shut, the latch automatically locks in position to hold the door closed. A light push on the door triggers a spring inside the latch to pop it open.

RARE-EARTH MAGNETS. One type of hidden latch hardware that I turn to quite often is a simple rare-earth magnet. These are easy to place just about anywhere by drilling a shallow hole (photo above). A washer on the door frame is attracted to the magnet, pulling the door closed tightly. There are also magnet cups available to house the magnet, as shown in the right photo above.

DOUBLE-BALL CATCH. Another unique piece of hidden hardware is a double-ball catch (left photo below). This type of catch can be surface mounted or mortised into the cabinet and works best on frameless doors that are inset. One half of the catch has two spring-loaded bearings that trap the latch on the other half. The spring pressure is usually adjustable.

BULLET CATCH. Similar to the double-ball catch is the bullet catch, below. This style of catch is mounted in a predrilled hole in a door stile or rail, with the strike plate mounted to the face frame. Their small size makes them perfect for light-duty applications.

For your next project, spend a little time planning out your hardware options. With so many styles available, it's easy to make a good choice to match the beauty of your project. W

▲ The double-ball catch is the perfect option for holding inset doors closed. Adjusting the spring pressure of the bearings is as simple as turning the screws on either side of the latch.

▲ The bullet catch gets mounted in a hole in the bottom of the door. The collar can be left proud (left photo) or recessed so it's flush with the door. The strike plate gets attached to the case frame.

creative technique for routing

Carved Panels

One of the reasons I enjoy woodworking is the opportunity to build one-of-a-kind projects that suit the needs of my home. Material selection, proportion, and details all play a role in making a piece unique. During one recent project, I wanted to make the frame and panel assemblies stand out.

▲ Common ¾" and ½" core box bits are all you need to turn your router into a decorative carving tool.

Rather than making a traditional raised panel, I turned to my router to create a textured, carved panel. With just the pair of router bits shown below, you create a series of random, overlapping cuts. I was aiming for a lightly textured surface that reminds me of water rippling over stones. The result contrasts nicely with the straight lines and right angles of the frame.

An appealing aspect of this technique is the variety of looks that are possible by making simple, subtle changes. By setting the router for a deeper cut, making more aggressive plunge cuts, or using just long or very short cuts, you can alter the overall appearance.

MAKE THE PANEL. Of course, before firing up the router, you need to have the panel in hand. It should be cut to its final size and have any joinery completed for it to fit into the frame.

SETTING UP. I clamped the panel to the workbench between bench dogs so that there wouldn't be any clamps in the way. As for the router, you only need to install the larger bit and set it for about a 3⁄16"-deep cut. Finally, I found that having a light positioned to one side of the workpiece helps to highlight the texture as it's formed.

MAKING CUTS. Even though you're creating a random-looking texture, the routing process shouldn't be haphazard. A methodical approach is more likely to result in an even texture pattern, while still being made up of random-sized cuts.

The drawings on the next page show the general motion of each cut. The idea is to ease the bit into the workpiece and back out while sliding the router forward. I use the back edge of the router baseplate as a fulcrum to lower and raise

How-To: MAKE FREEHAND CARVING CUTS

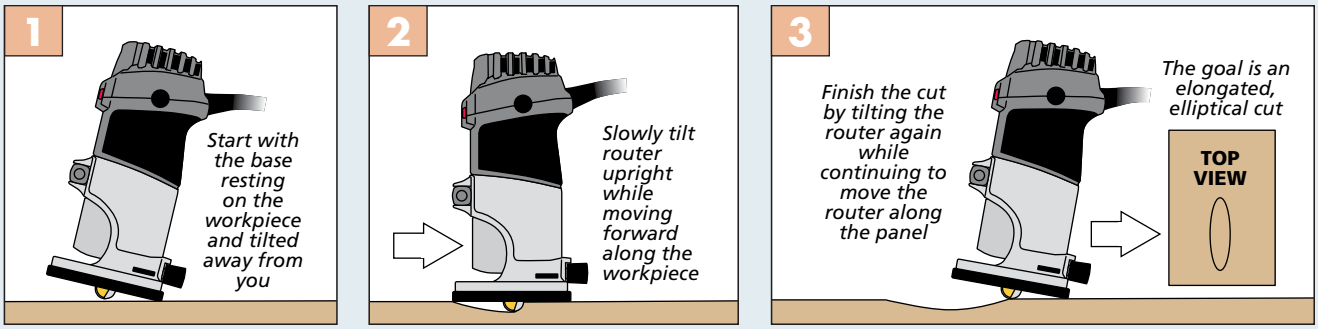

the bit into the workpiece with the greatest control. What you're looking for is a gently tapered cut. In order to create a continuous, flowing pattern, I start at one end of the panel and work side-to-side down its length.

A VARIED LOOK. In practice, there are a few other details to consider when creating the textured pattern. For starters, vary the space between the first set of cuts with the larger bit. That leaves room for filling in with the smaller bit later on. All the same, having cuts that intersect and overlap give the work a sense of unity, as well.

▲ The smaller bit follows the larger bit to blend the cuts into a flowing pattern of ripples and contours.

Making cuts freehand puts you well on the way to a random look. You can help things along by altering the length and depth of cuts. My cuts are usually only 2"-3" long. Some cuts run nearly the full depth of the exposed bit while some merely skim along the surface.

For the most part, the cuts I make follow the grain direction. Cross-grain cuts open the possibility for tearing and a rough surface finish. That being said, you can angle cuts slightly left or right.

As you work, take care to avoid rows of cuts that begin or end at the same place. If you see that happen, feel free to go back and extend some of the cuts.

EDGES & ENDS. The ends and edges of the panel deserve special attention. There's a balance here between an edge that looks too square or too muddled.

Along the edges of the panel, I like to run some cuts off the edge. In other places, start with the bit away from the edge of the panel and merge into it. A third technique is to skim the edge, as shown in the bottom photo.

After completing the cuts, raise the workpiece upright. With a raking light from the side, gauge your progress. If necessary, go back over areas that either look too bare or too uniform.

SECOND ROUND. I use a smaller diameter bit to vary the look and to blend heavier cuts into a more unified pattern. Like before, I set the bit for a shallow cut (a little more than ⅛") and work from one end of the panel to the other.

In this round, you're working to remove the remaining flat portions of the surface. Although a few small, flat portions will look just fine.

There are two ways to do this. The first method is to start the cut with the bit inside a larger cut and work out. This gives the first cut a smoother transition.

The second approach is to make a light overlapping pass that traces alongside a larger one. In this way you sculpt and reshape the edge of the first cut.

After this round of cuts, the panel is complete. The texture really comes to life once you apply a coat of finish. Then fit the panel into the frame and admire your custom work and new skills. W

▲ Don't forget the edges. To avoid the edges looking too square, vary the direction and depth of cut. A few flat areas blend into the rest of the pattern and won't be noticeable.

► When the panel is installed in the frame, you can see how well the textured look complements the stiles and rails.

great gear

all-new

Powermatic Tenoning Jig

For my money, it doesn't get much better than a mortise and tenon joint. This non-mechanical joint is a mainstay in traditional woodworking. But a rather big challenge (at least for me) is deciding on the best method to use to create the tenons.

When I have a lot of tenons to cut, I'll often pull out my dedicated tenoning jig. But this method for making tenons comes with a few drawbacks. For one, weighing in at 25 lbs., it can be a struggle just to lift the jig out of storage and carry it to the table saw. And I've always been frustrated with the length of time it takes to set up a tenoning jig before you can start cutting.

NEW STYLE. Tenoning jigs for the table saw have been around for a number of years, and, with the exception of minor differences here and there, they're mostly the same design across brands. So when *Powermatic's* new *PM-TJ* tenoning jig showed up in the shop with a very different look from most of the others, I was intrigued to find out if they'd found a way to build a better mouse trap.

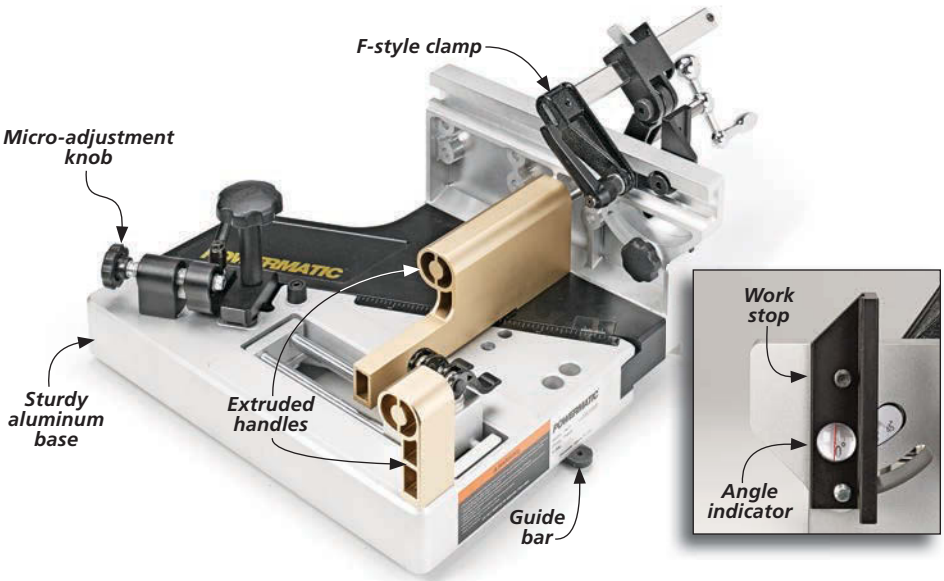

FEATURE PACKED

Straight out of the box, the *Powermatic* jig is almost ready to use. There are just a few parts to bolt on using the supplied wrenches before you're able to set the

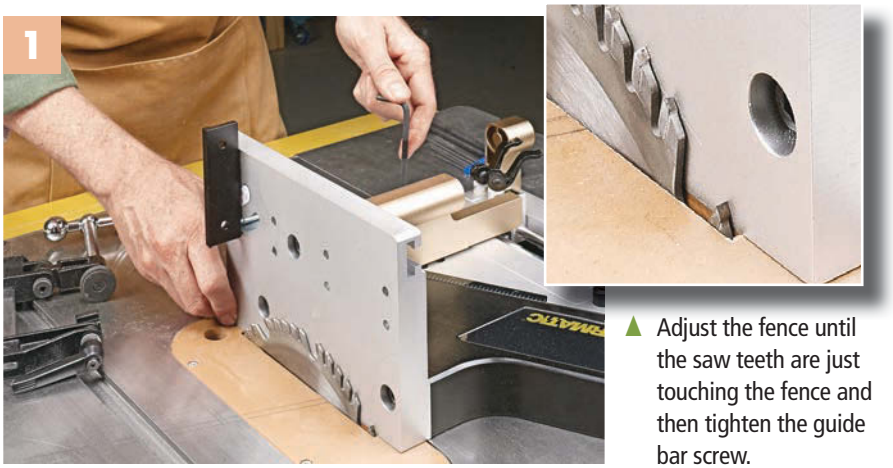

Adjust the fence until the saw teeth are just touching the fence and then tighten the guide bar screw.

With the fence still touching the saw blade, push both stops against the rear of the handle and lock down stop #1.

Move the fence forward so its out of the way. After placing the mortise chisel between stops #1 and #2, lock down stop #2.

Set the workpiece against stop #2, pull the handle back until the rear face is just touching it, and tighten the lock knob.

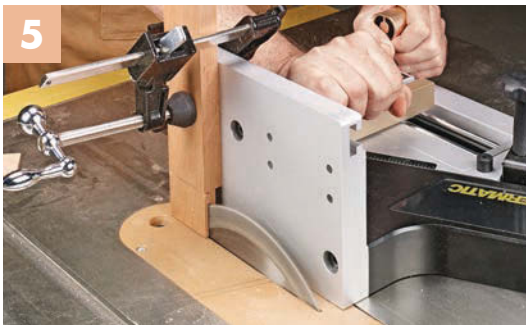

After making the first pass (main photo, previous page), flip the workpiece around and make the second cheek cut.

jig in place on the table saw and align it to your blade. But before jumping into the setup procedure, let me touch on a few things about this jig that jumped out at me right away.

LIGHTER WEIGHT. The first thing I noticed is that this jig's footprint is rather substantial compared to other tenoning jigs I've used (main photo, previous page). But despite this obvious size difference, the extruded aluminum body of the *Powermatic* jig means that it only weighs 17 lbs. This made it quite a bit easier to move on and off the table saw.

COMFORTABLE. Another feature that really made this jig a pleasure to use is the placement of the handles. Unlike most tenoning jigs that use screw-in, vertical "posts" as handles, the *Powermatic* jig incorporates two extruded handles that run horizontal to the saw surface. These ergonomically shaped and placed handles felt very natural in use.

UNIQUE DESIGN. But in my book, what set this tenoning jig apart from the rest is the creative design of the jig base. It actually consists of two separate parts (one black, one silver) that interlock using a sliding taper design. These two parts glide effortlessly against each other. And since the fence is attached to the black section of the base, positioning the fence is a breeze since there is very little resistance. The base, along with some other key features of this jig, are shown in the photos at the bottom of the previous page.

INTUITIVE SETUP

Aligning the guide bar on the bottom of the jig to the saw blade took me less than a minute. Simply loosen the fence lock knob and slide the fence against the saw blade. Move the jig side to side until both the front and rear teeth are touching the fence (photo 1), then tighten the guide bar screw. This also establishes the "zeroed-out" location of the fence.

Now you're ready to set the jig to make tenons. And this is where the *Powermatic* jig forges its own path. Instead of a trial and error method common for setting other tenoning jigs, this jig is quick to set up for just about any size tenon. Simply use a spacer the same thickness as your desired tenon and the workpiece itself (photos 2 through 4). If you're using a mortising machine to cut the mortises, you can even use the mortise chisel as the spacer (refer to photo 3 at right).

READY TO USE. With the jig properly set up, you're ready to clamp the workpiece in place and make the first pass over the saw blade (main photo on previous page). After that, simply flip the piece around and complete the tenon cheek on the other side, as shown in photo 5. This will result in a perfectly centered tenon on the end of the workpiece.

MICRO-TUNING. If you need to fine-tune the tenon thickness or create offset tenons, the procedure isn't difficult. A micro-adjustment knob at the back of the jig makes it easy to move the fence position in very fine increments.

While some folks may balk at the almost $300 price tag of the *Powermatic* jig, if you have to create a lot of tenons, you'll find this jig almost indispensable. The flexibility it provides to change tenon sizes quickly and accurately will be a marked advantage in any shop. W

preparing a surface with a Hand Plane

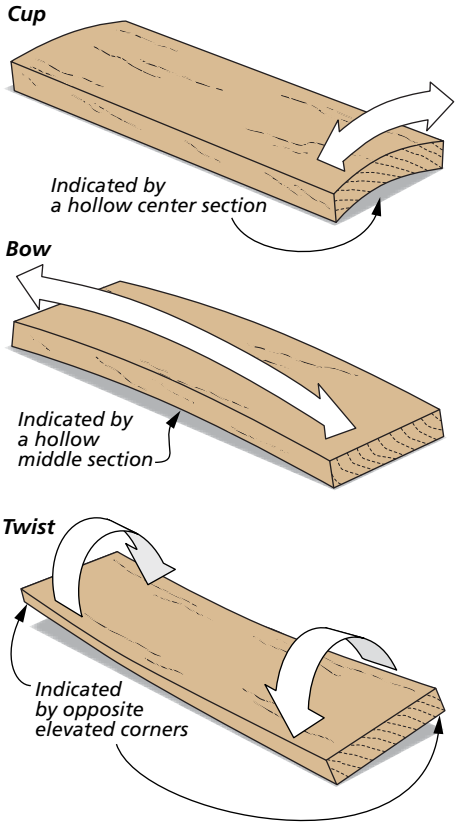

Like many home shops, mine is on a budget of both money and space. This juggling act works itself out in many ways. One compromise was going with a 6" jointer. Instead of a larger 8" machine, I chose to spend my cash on a higher-quality planer.

Most of the time, I'm completely happy with this decision. There's only one time this sacrifice shows up — preparing stock that's wider than 6"

The tried-and-true method for getting wood flat and square goes like this: Flatten one face of the stock on the jointer. Then use the planer to surface the opposite face. Then, back at the jointer, true an edge and you're set to go. But when I have a board that's wider than I can work with at my jointer, the challenge is getting that first face flat.

It would be nice to use the planer, but when it comes to dealing with unruly boards like the ones shown at left, the planer won't do. A planer isn't designed to flatten a board. Its job is to make the faces parallel and make a board a consistent thickness.

PLANE FACTS. A quick and efficient remedy for this is flattening the first face with a hand plane. I'm not talking about creating a perfect, glass-smooth surface. The goal is simply to knock down the high spots of the board so you can run it through a planer. And using the right strategy, it's not a difficult process.

CONSIDER THE BOARD. Before you start planing one face of a board, however, you need to know what kind of problem you're dealing with. The approach will vary based on the problem at hand. You have two things to consider when troubleshooting lumber.

As the drawings to the left show, there are three common surface problems to contend with. Cupped and bowed boards are pretty straightforward. Twists, on the other hand, can be trouble. But if the board has the look you're after, it may be worth the effort. As for grain direction, you can make a

NOTE: Scribe edges of board to help guide the planing process

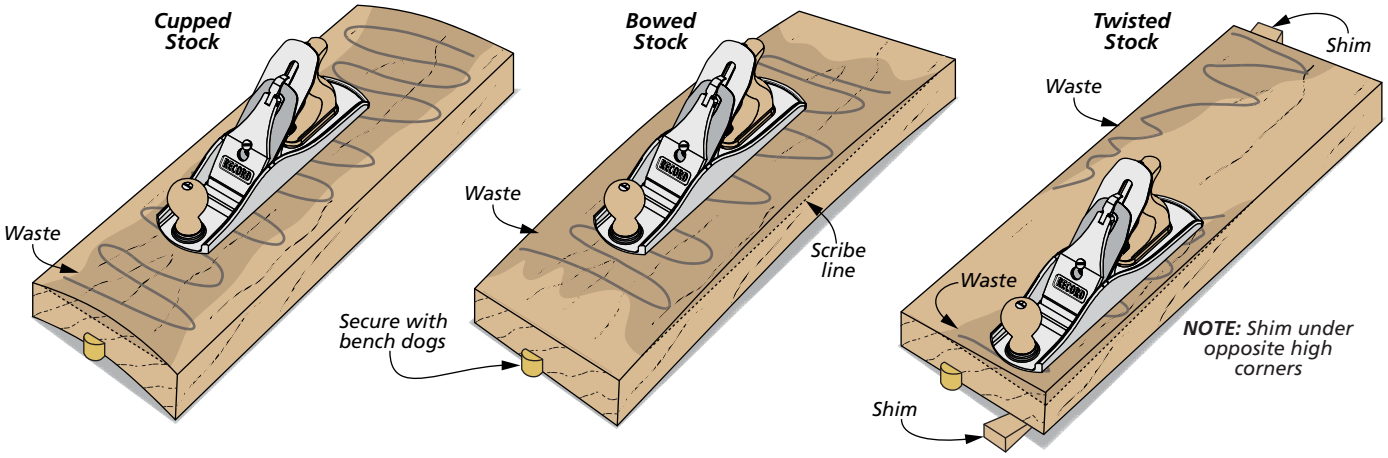

quick survey by looking at the edges of the boards. A consistent grain direction makes for easier planing.

GET A GRIP. Planing a board is a kinetic activity, to say the least. Even a board that requires a light touch with the plane needs to be firmly held in place. The drawings above show how using bench dogs and shims fit the bill.

But before the shavings begin to fly, take a little time to map out your plan of attack on the surface of the board. As all three examples above show, you can start by scribing a line where needed around the edges of the board. From there, with a fairly soft-leaded pencil (this will leave a darker, more noticeable mark), you can highlight all the areas to be removed on the surface of the board.

PLAN OF ATTACK. With all that in place, it's time to go to work. Regardless of the type of grain terrain you're dealing with, it's best to remove the wood in light, modest cuts. Since you won't be shaving a lot of wood at first, set your plane for a medium cut and start at the highest point of the board.

These first light passes will help you get a feel for the grain, as well. To avoid tearout, it's important to plane with the grain direction. This might require planing diagonally across the board. The whole process is a matter of trial and error. With that in mind, I usually aim to remove the stock in three or so "levels," kind of like the topography rings on a map. As you proceed, if the cut seems a little aggressive, you can adjust the blade depth as needed.

A quick way to check your progress is to flip the board over and see how much it rocks on the bench surface. Or you can use a simple set of winding sticks that are featured in the box below.

BACK ON TRACK. Once the surface is reasonably flat, you can resume the traditional steps of stock preparation. Start by running the board through the planer with the flattened face down. Then flip the board over and plane the opposite face.

Remember, it's important to remove thin layers of material evenly from both sides of the board until you come to your final thickness. If you hog all the material off one side, there's a good chance you will stress the board and find yourself right back where you started, dealing with a another warped surface. W

How-To: WINDING STICK BASICS

Winding sticks are one of those simple shop tools that, when needed, nothing else will do. And rightly so, as they are efficient at what they do. They telegraph the surface inconsistencies across any board that you're trying to flatten.

All you need to survey a surface is two straight sticks. Even a couple lengths of aluminum angle will work fine. Place the sticks at opposite ends of the board, then sight across the tops to reveal the difference along the board.

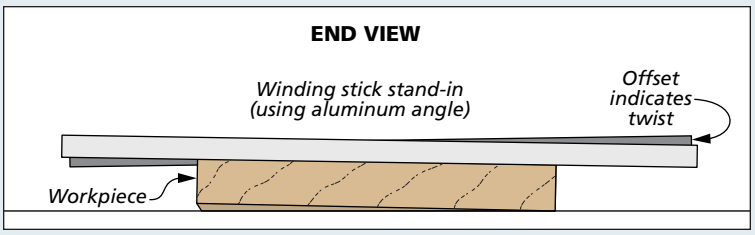

▲ Winding sticks are used to determine any variance across the surface of a board. The amount of material to remove is magnified by the overall length of the sticks.

Weekend Project

Make a bowl with a Router Carving Jig

▲ With the router carriage shown above and a set of templates, you can create a bowl in less than a day. The design possibilities are endless.

This project started with a simple idea — use a router to make a decorative bowl, like the ones you see at left. There's a little more going on, but it's a great way to get more from your router.

Before you can make the bowl, you need a router jig and some templates. From there, you'll employ an unusual technique to turn a square blank into a graceful, curved bowl. By the end, we were wondering what the project really was. Is it the jig and template system, or is it the bowl itself? We did agree on one thing — making a bowl (and jig) is a great way to spend some time in the shop.

THE BOWL BLANK. From the outset, I was worried it would be difficult and expensive to find a large, thick piece of wood for the bowl. As it turns out, this project is a great way to use up small cutoffs you have lying around the shop. I found this out by accident. To try out the jig, I glued up a blank from some poplar scraps. When I was done, the bowl had such a nice form that I painted it. The result speaks for itself.

If you prefer a bowl with a natural finish, take a look at a couple of the other bowls shown at left. The blanks for these are made from narrow strips of wood glued together.

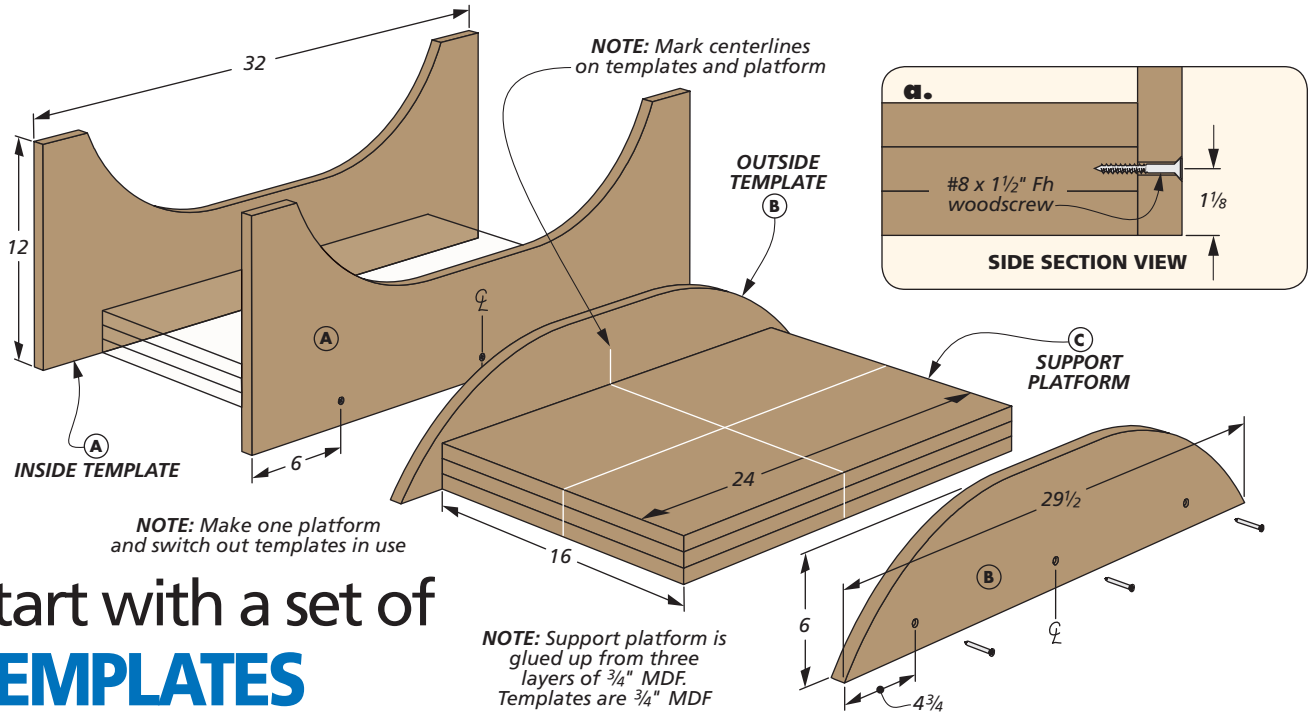

Start with a set of **TEMPLATES**

Sculpting a bowl with a router requires a certain amount of prep work. To make controlled, consistent cuts, templates are used to guide the router. One pair of templates are used to make the cuts that form the inside of the bowl. Another pair help shape the outside.

The templates shown here are used to make the painted bowl shown on pages 18 and 23. To make different shapes, you need to make new templates (two other shapes are shown in the online extras).

SHAPING TEMPLATES. I made the templates from MDF because it's inexpensive and fairly easy to shape. Although a pair of templates are required for each part of the bowl-making process, I focused on making just one for each pair.

▲ Making multiples doesn't have to be twice the work. Turn to page 65 to see how to quickly make identical parts.

Use the drawings below to lay out the profile of the template on a blank. Then cut most of the waste away using a band saw. (A jig saw is another good option.) You want to stay just to the waste side of the line when cutting. This saves time when removing the blade marks and allows you to shape an even profile with files and sandpaper. When you're satisfied with the shape of the template, use the router technique in the photo below and on page 65 to make a copy.

SUPPORT PLATFORM. The bowl blank gets attached to a thick support platform (drawing above). The platform also serves as a mounting point for the templates during each part of the process. The platform raises the bowl blank above the benchtop to provide clearance for the bit when shaping the outside.

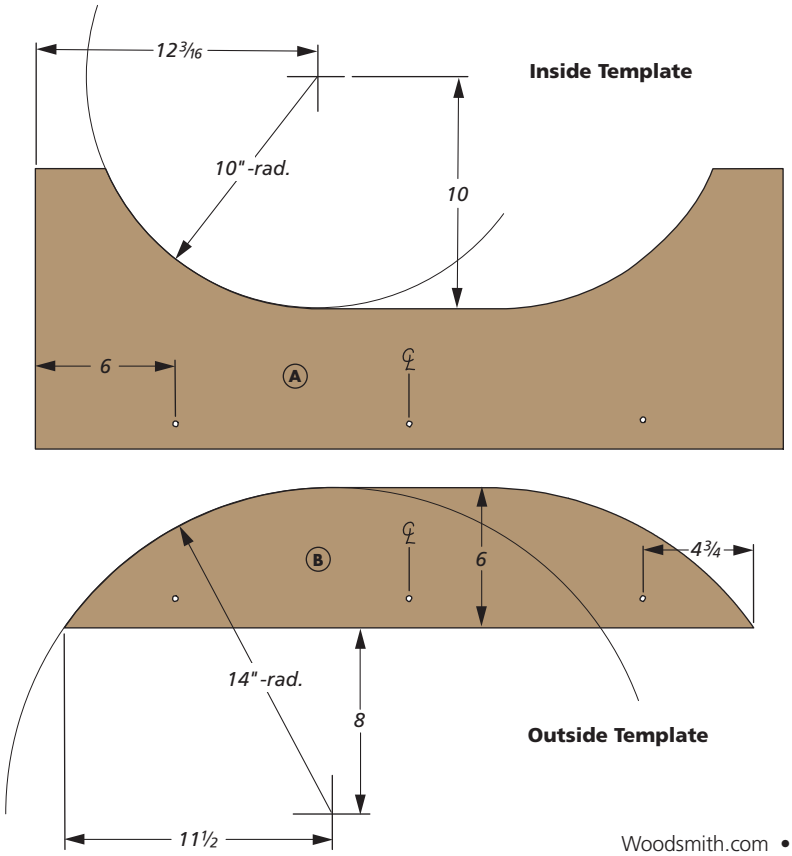

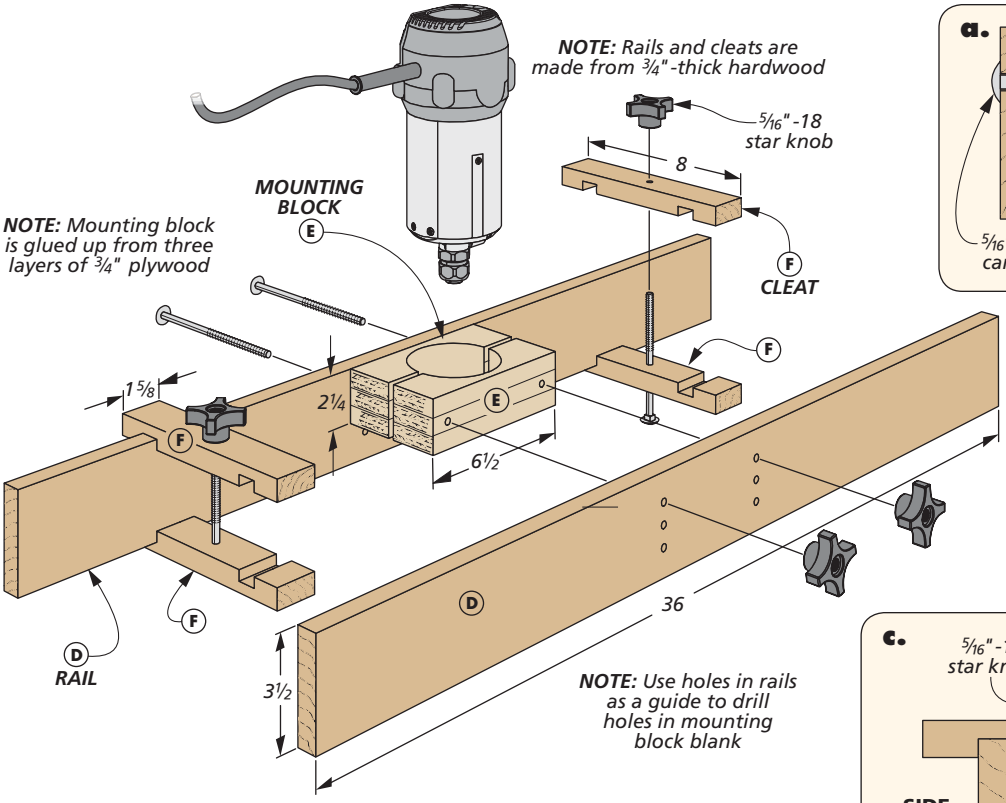

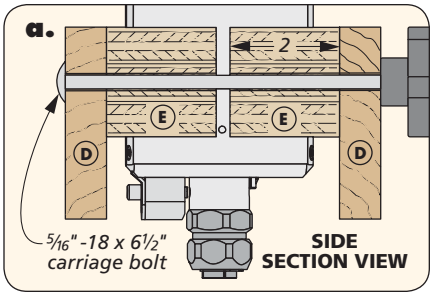

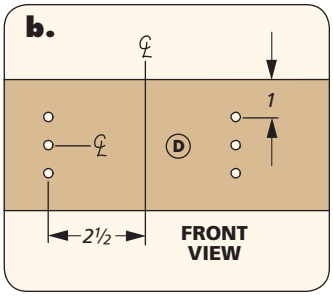

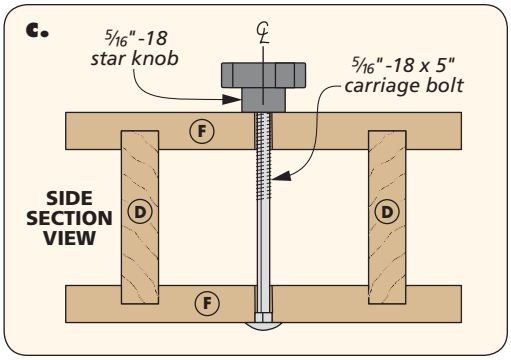

Sliding **ROUTER CARRIAGE**

The templates guide the path of the router, but you need a way to support the router above the workpiece and guide it along the templates. That's where the carriage shown above comes in. The router is captured between two mounting blocks attached to two long rails.

The rails ride along the top of the templates, guiding the bit in and out of the cut. A pair of cleats at each end of the carriage serve as stops to position the router and keep it moving in a straight line along each of the templates.

LONG RAILS. I made the two rails from maple for stiffness. Besides cutting them to size, you need to drill a set of mounting holes, as shown in detail 'b.' These are used to secure the router and a couple of mounting blocks to the rails. The additional pairs of holes give you more flexibility for setting the cutting depth of the bit.

MOUNTING BLOCKS. The router motor body is captured by a pair of thick mounting blocks. It's important that the mounting blocks have a tight grip on the motor body. For this to happen, I started with a single glued-up blank and drew a circle that matched the diameter of the router motor housing.

How-To: SIZE THE MOUNTING BLOCK & CLEATS

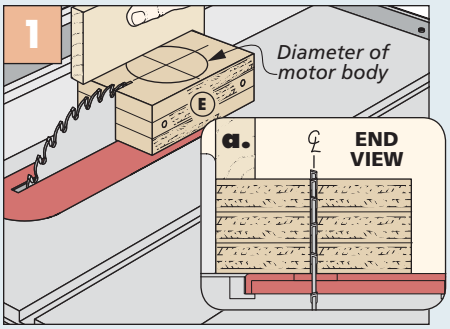

Split the Block. After marking for the router motor body and drilling the mounting holes, cut the block in half.

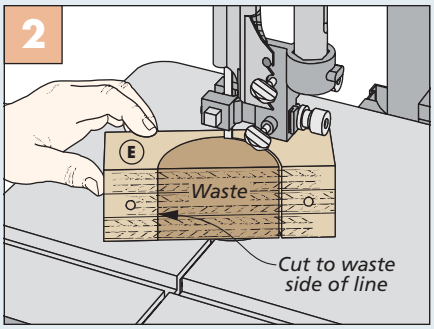

Smooth Curve. With a ¼"-wide blade, cut out the waste in the blocks to accept the router motor.

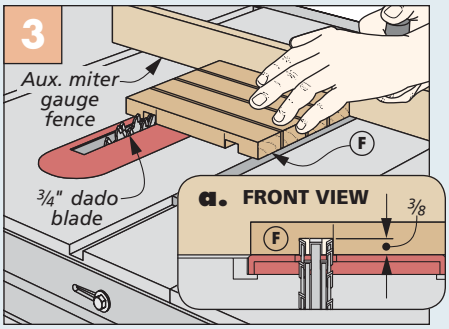

Registration Dadoes. Space the dadoes so the cleats will slide smoothly on the rails with the router in place.

Figures 1 and 2 on the previous page pick up the remaining steps. After drilling the mounting holes, the block is cut in half. Remove the waste at the band saw and use a sanding drum or sanding block to clean up the blade marks.

The router motor and mounting blocks are held with long carriage bolts and star knobs. This is shown in the main drawing and detail 'a' on the previous page.

SIDE STOPS. The stop assemblies on the carriage are each made from two wood cleats joined with some hardware. Dadoes in the cleats fit over the rails. Size the dadoes for a smooth, sliding fit. Rather than cut the dadoes individually in each cleat, I made all the cuts in a wider blank, as shown in Figure 3 on the previous page. The dadoes are spaced to match the width of the mounting blocks with the router clamped in place.

Replace the dado blade with a combination blade and cut the cleats to width. Like the mounting blocks, the cleats are secured with carriage bolts and knobs, as you can see in detail 'c' on page 20.

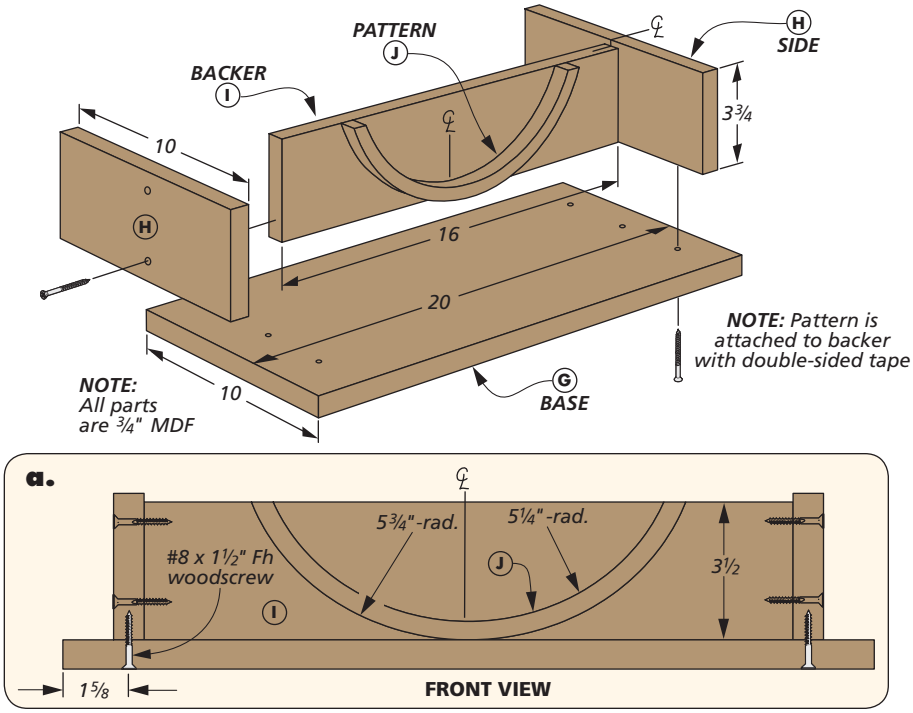

SETUP GAUGE

Before putting the templates and carriage to use, you need a reliable method to set the router position and bit depth. That task falls to the setup gauge.

BASE & SIDES. In the drawing above, you can see the parts that go into making the setup gauge. It consists of an MDF base and a pair of sides. The base is extra long so that you can clamp it to your workbench. The sides are attached with glue and screws. The sides are spaced to correspond with the overall width of the templates and support platform you made earlier.

BACKER & PATTERN. Spanning the sides is a pattern attached to a backer. The pattern is a cross section of a finished bowl at its midpoint. Both pieces are also made from MDF. The backer is simply cut to fit between the sides.

The pattern is a little more involved only because of its shape. Lay out both the inner and outer curve on an extra-long blank. The band saw is an ideal tool for cutting out the pattern, as you can see in Figure 1 below. Stay just to the waste side of the layout line for both cuts.

The layout lines serve as a guide for creating a smooth, even curve. The MDF is soft enough to easily shape with files and sandpaper. However, I found that a sanding drum installed in the drill press speeds up the process for smoothing the inner curve, as shown in Figure 2.

When you're satisfied with the shape, tape it to the backer. Center the pattern side to side, making sure the top edges are flush with the upper edge of the backer, as illustrated in detail 'a' above.

How-To: SHAPE THE PATTERN

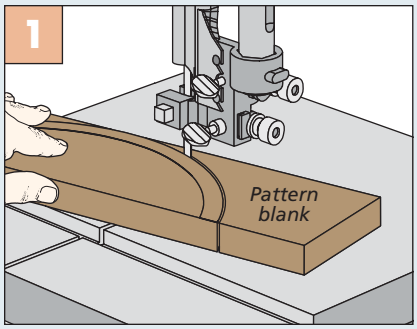

Cutting Curves. To ease the cleanup, cut the curves in a single pass while staying to the outside of the lines.

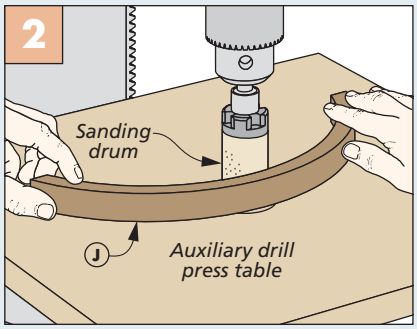

Speed Sanding. Smooth the inner curve with a sanding drum. Take light passes to work to the layout line.

Materials & Supplies

A	Inside Templates (2)	¾	MDF - 12 x 32
B	Outside Templates (2)	¾	MDF - 6 - 29½
C	Support Plat. (1)	2¼	MDF - 16 - 24
D	Rails (2)	¾	x 3½ - 36
E	Mounting Blocks (2)	2¼	Ply. - 2 x 6½
F	Cleats (4)	¾	x 1⅝ - 8
G	Base (1)	¾	MDF - 10 - 20
H	Sides (2)	¾	MDF - 3¾ - 10
I	Backer (1)	¾	MDF - 3½ x 16
J	Pattern (1)	¾	MDF - 12 rgh. x 4 rgh.

- (16) #8 x 1½" Fh Woodscrews
- (2) 5/16"-18 x 6½" Carriage Bolts
- (2) 5/16"-18 x 5" Carriage Bolts
- (4) 5/16"-18 Star Knobs

ALSO NEEDED: *2.6 bd. ft. of hard maple and one 48" x 96" sheet of ¾" MDF*

Laminated **BOWL BLANK**

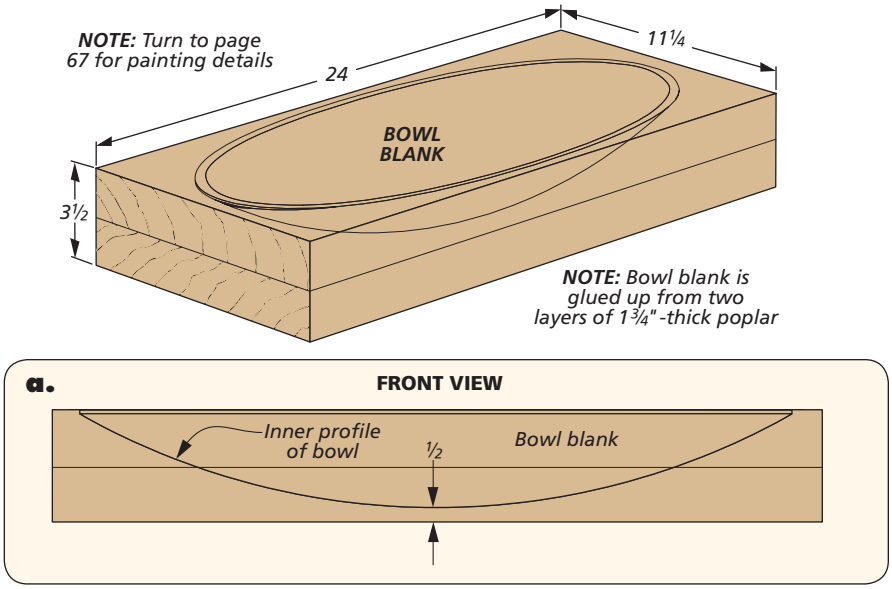

While you could certainly use a thick block of wood for the bowl blank, stock that large can be difficult to come by. Another option is to glue up a blank from thinner stock. For the painted bowl shown on the next page, I used poplar.

GLUING UP A BLANK. To make the blank, I cut two oversize pieces and laminated them together face to face. The key here is getting a tight, thin glue line. So take your time to prepare the glue surfaces. Then use plenty of clamps to prevent any gaps within the blank.

Once the clamps come off, it's time to trim the blank to clean up the edges and ends. To help locate the blank on the support platform, draw centerlines on all sides of the blank (Figure 1 below).

CARVING PROCESS

The carving starts with the inside of the bowl. The routing process isn't difficult, though it is repetitive as you go back and forth between the setup gauge and the bowl and templates. The box below covers the main steps. Center the bowl blank on the support platform and secure it with screws, as in Figure 1.

FIRST CUTS. The pattern allows you to set the stops and bit depth. I found that routing through the backer on the setup

How-To: SHAPE THE INSIDE

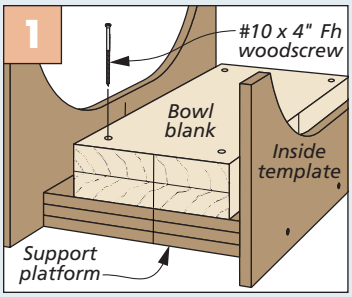

Secure the Blank. Drive long screws through the corners of the blank. These holes will be cut away later on.

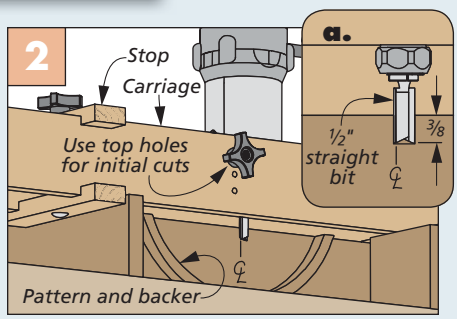

The Setup. With the carriage on the setup gauge, use the stops to position the router just off center. Set the bit depth and make a cut through the backer.

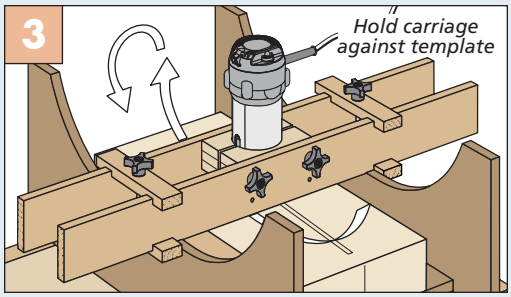

First Cuts. Place the carriage on the templates with the bit away from the blank. Turn the router on and make a pass through the blank. Flip the carriage around for a second pass.

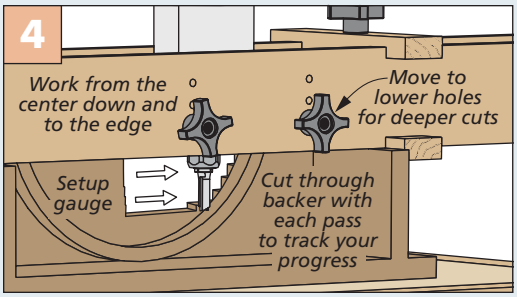

Repeated Passes. Using the setup gauge as a guide, reset the position of the router by adjusting the stops and bit depth to clear out the waste in multiple passes.

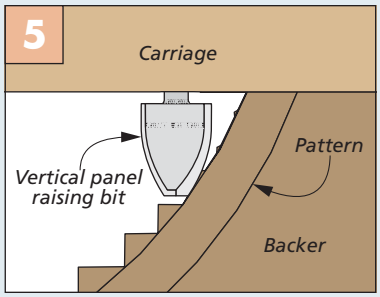

Smooth Sides. Switch to a vertical panel raising bit to trim along the sides. Making fine adjustments leaves a smoother surface.

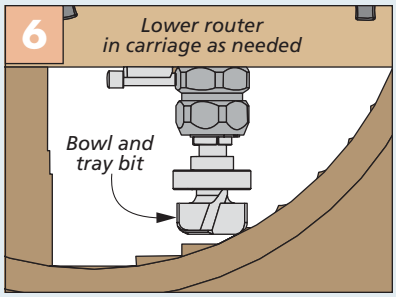

Bottom Cuts. For shaping the bottom, install a bowl and tray bit. Its flatter profile helps to remove the "steps" left by the straight bit.

gauge helped me to better monitor my progress, as in Figure 2. For each bit and stop setup, you make two passes across the bowl, as illustrated in Figure 3.

Your main aim in the first stages is removing waste as efficiently as possible. For this, an ordinary straight bit does the job (Figures 2 through 4). Since the surface quality isn't important at this point, I set the bit to take a deeper cut with each pass than I usually would.

SMOOTH SURFACES. As you get closer to the final shape, you want to create a smoother surface. To do this, switch to bits that have curved profiles.

Along the sides of the bowl, I found that a vertical panel raising bit matched the steeper sides, as shown in Figure 5. (Refer to sources on page 67.) For cuts at the bottom of the bowl where the profile is flatter, I opted for a bowl and tray bit, as shown in Figure 6.

NOW, THE OUTSIDE. The outside of the bowl is shaped in a similar fashion as the inside. But there are a few important differences that I'd like to highlight.

First, you need to swap out the inside templates for the outside templates. Due to the shape of the outside templates, the bowl blank needs to be trimmed so it won't interfere with the router carriage. To do this, I set the bowl blank in place and scribed the edge of the template onto the bowl and knocked off the corners with a hand saw (Figure 7 below).

Then in Figure 8, you can see how to rough cut the bowl to save time routing. After reconfiguring the setup gauge (Figure 9), it's back to the straight bit and a couple of curved bits to shape the outside, as in Figures 10 and 11.

In order for the bowl to sit without rocking, I sanded a flat on the bottom. You can find the details for the two-tone painted finish on page 67. The result is a one-of-a-kind keepsake for your home. W

▲ The smooth, even grain of poplar makes it an ideal choice for a painted bowl. Milk paint provides a matte finish that highlights the routed form.

How-To: FORM THE OUTSIDE

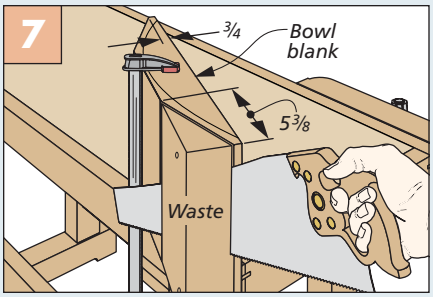

Trim the Ends. To provide clearance for the router and carriage to shape the outside, bevel the ends of the bowl blank with a handsaw.

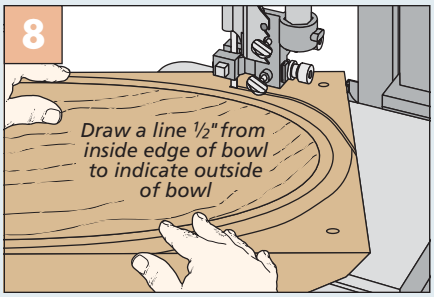

Cut to Rough Shape. Using the inside of the bowl as a guide, draw a line for the outside rim and cut the bowl to rough shape at the band saw.

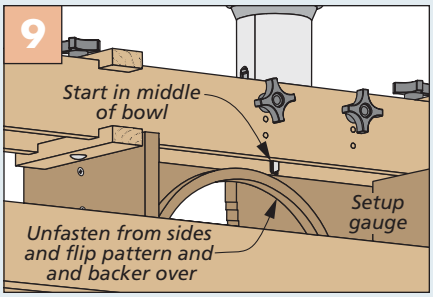

Flip the Setup Gauge. Turn the backer and pattern over and use the same process as before to begin shaping the outside of the bowl.

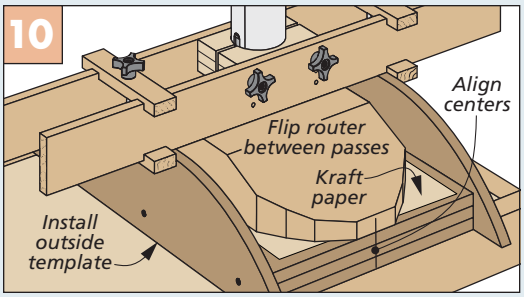

Outside Templates. Secure the bowl blank to the platform by gluing it down with a layer of kraft paper between the bowl and platform. This creates a secure but easy-to-separate bond.

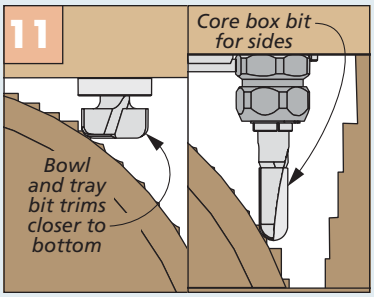

Shape the Outside. After removing most of the waste, use a bowl and tray bit, along with a core box bit, to refine the shape.

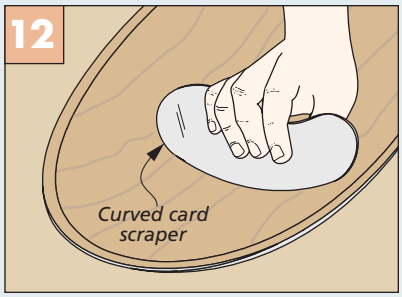

Smoothing. Rasps and files make quick work of the outside. On the inside, a curved scraper quickly removes ridges prior to sanding.

Shop Project

Ultimate Outfeed Table

This shop upgrade has it all — a large worksurface, ample storage, and a unique sheet goods lifting system. Plus, it's easy to roll-around the shop.

Outfeed support is essential when cutting long boards or large sheets of plywood at the table saw. But what if the support could offer a helping hand at other times, too? That question was the spark that led to the table you see here.

For starters, the outfeed table has a large, flat top so it's ideal for outfeed purposes. But it's also plain to see how this table might be used as an assembly table, finishing station, auxiliary worksurface — you get the idea.

Below the table, two heavy-duty shelves add some much-appreciated storage space. Casters on the table, and a mobile base on the table saw, allow you to arrange the shop space for any task. Shop-built levelers let you lock the table in place with a few turns of the knobs.

The two curved extensions in the photo above are sure to catch your eye. These removable cradles are a back-saving solution for one of the most challenging parts of cutting plywood and other sheet goods — lifting them up to the saw table. In the left photo on the next page, you can see how the cradles carry the lion's share of the weight. You just need to tilt the sheet back, and it rocks onto the saw table with a lot less effort.

Before getting started, there's one item to note: I sized the height of the table (and the cradles) to match the height of my saw. Double-check your table saw, so you can make any modifications to the plans as you go along.

Construction Overview / *OVERALL DIMENSIONS: 48"W x 34"H x 36"D (cradles stored)*

Large laminate-covered top creates an ideal extra worksurface

Stout hardwood frames are used to provide solid support for top and two storage shelves

Laminate strips allow sheet stock to slide smoothly

Three-layer ends create a strong, rigid assembly

Upper shelf provides storage for cradles

Two sturdy shelves offer ample storage

Shop-made levelers make it easy to account for uneven floors

Cradles fit into pockets in end assemblies when in use

Swivel casters make moving the table a breeze

Removable cradles ease the burden of lifting sheet materials onto saw table

▲ The curved cradles carry the weight of a sheet of plywood to make it easy to tilt it up onto the table. Then just slide it over to the table saw to make a cut.

▲ To save space, the cradles tuck away on the top shelf of the table when you aren't using them. Handholds make them easy to grab.

Strong, sturdy
END ASSEMBLIES

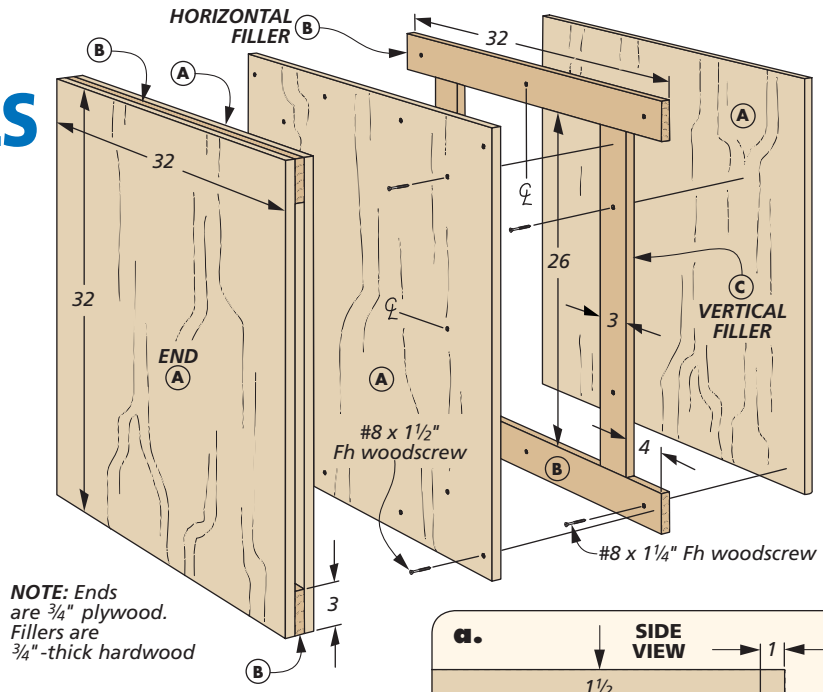

One of the interesting construction features of the outfeed table is its simplicity. Two basic assemblies combine to form the table: End assemblies and shelf assemblies. You can see both types in the drawings on this page and the next. In a nutshell, solid-wood frames provide a rigid skeleton, while plywood panels form stable surfaces.

While I used Baltic birch plywood and maple, feel free to use other types of plywood and solid wood to suit your needs and budget. The key is making sure the materials are flat and straight.

END ASSEMBLIES. I began by making the two end assemblies. The drawing at right shows the arrangement. A pair of plywood panels sandwich a hardwood frame to create a flat, rigid structure. What's nice is that you don't need to cut any joinery. Large glue surfaces and screws solidly join one layer to the next. The key is cutting the corresponding parts to a consistent size.

In order to keep the outside face free of visible screw heads, start with the outside end face down on your workbench. Add the horizontal fillers so they're flush with the top and bottom ends. Use the dimensions in detail 'a' as a guide for drilling the screw holes.

The vertical fillers come next, but notice they're inset from the edge, as shown in the drawing above. This creates a pocket for registering the plywood lifting cradles. The inner end panel completes the assembly sandwich. Apply a bead of glue to the filler pieces and set the inner end panel in place. Once the edges are all aligned, drive the screws home.

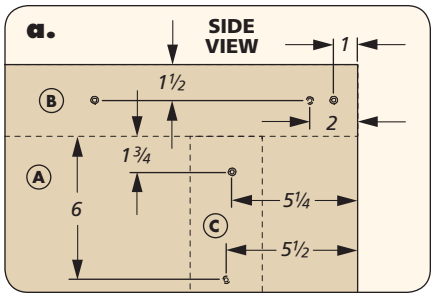

SHELF ASSEMBLIES

The second type of assembly joins the ends into a single unit, and these are the two shelf assemblies. A third, slightly modified shelf assembly supports the

Materials, Supplies & Cutting Diagram

A	Ends (4)	¾ ply. - 32 x 32
B	Horizontal Fillers (4)	¾ x 3 x 32
C	Vertical Fillers (4)	¾ x 3 - 26
D	Aprons (6)	¾ x 3 - 39½
E	Rails (6)	1½ - 3 x 30
F	Shelves (2)	¾ ply. - 31½ x 39½
G	Brace (1)	¾ x 3 - 36½
H	Top (1)	¾ ply. - 36 x 48
I	Leveler Bases (4)	1½ x 2½ - 6
J	Leveler Supports (4)	1⅝ x 2¼ - 5
K	Cradles (2)	¾ ply. - 32 x 33⅞
L	Cleats (2)	¾ x 1¼ - 29½
M	Cradle Shelf (1)	¾ ply. - 29½ x 39½

- (28) #8 x 1¼" Fh Woodscrews
- (98) #8 x 1½" Fh Woodscrews
- (24) #12 x 3" Fh Woodscrews
- (4) 3" Swivel Casters
- (16) #12 x ⅝" Ph Woodscrews
- (4) ½"-13 T-Nuts
- (4) ½"-13 Swivel Mounts
- (4) ½"-13 Knobs
- (1) ½"-13 x 36" Threaded Rod
- (8) ⅜" x 5½" Lag Screws
- (8) ⅜" Washers

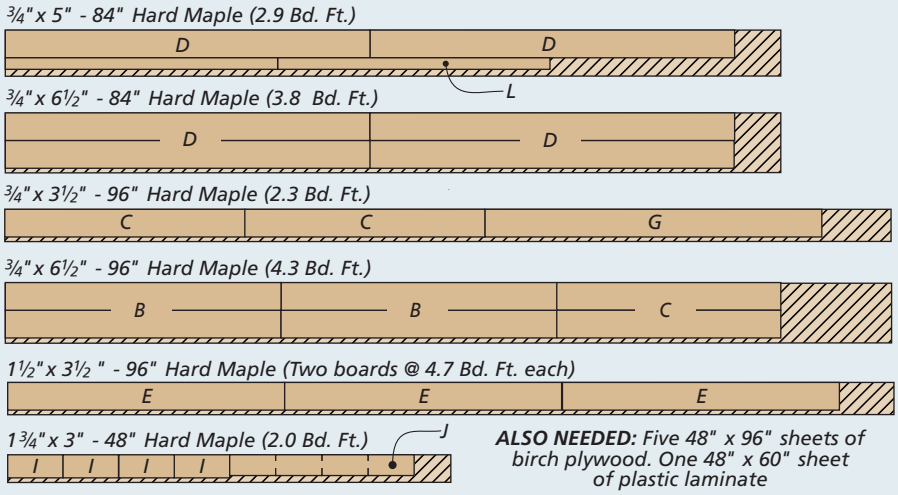

ALSO NEEDED: *Five 48" x 96" sheets of birch plywood. One 48" x 60" sheet of plastic laminate*

NOTE: *Parts 'I' planed to 1½" thick. Parts 'J' planed to 1⅝" thick*

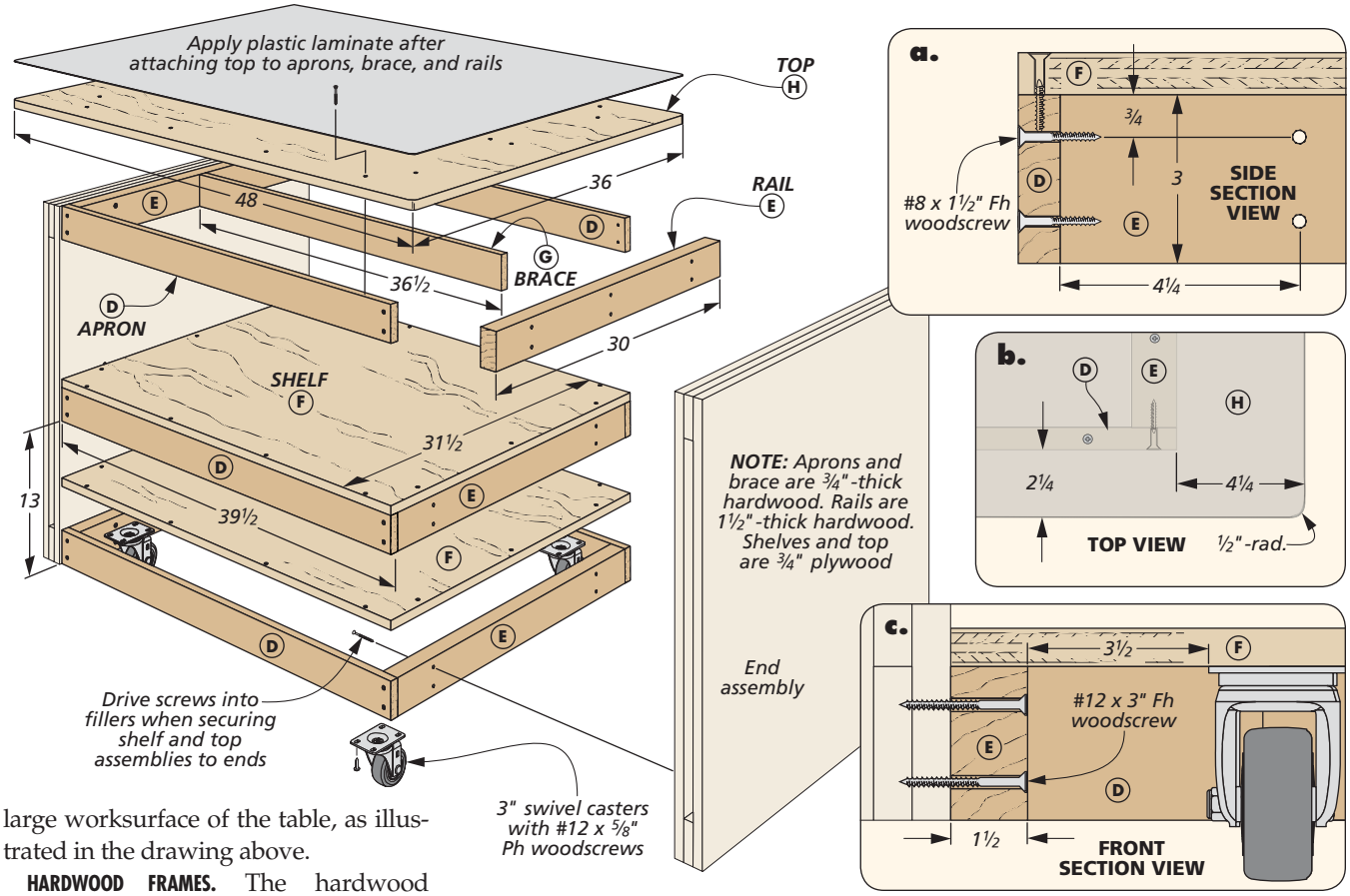

large worksurface of the table, as illustrated in the drawing above.

HARDWOOD FRAMES. The hardwood frames that support the plywood shelves come first. Each frame consists of a pair of aprons and a pair of rails. Here again, glue and screws take care of the joinery, as shown in detail 'a.' I used two different thicknesses for the aprons and rails. Since the assemblies are screwed to the ends through the rails, thicker material creates a stiffer connection, as you can see in detail 'c.'

Once the frames are complete, glue and screw the plywood shelf to the top. Working from the bottom up, join the shelf assembly to the two end assemblies. (The shelves are centered side to side.) Locate the holes for the screws for the upper shelf so they anchor into the vertical fillers, as in detail 'a.'

TOP FRAME. The frame that supports the top includes a centered brace to provide additional support for the worksurface. It's screwed into the rails.

The top is a large piece of plywood that overhangs the frame on all sides. This maximizes the work area and makes it easy to clamp workpieces to the top.

I covered the top with plastic laminate for a durable, smooth surface. The laminate reduces friction when the table is used for outfeed support. When pressed into duty as an assembly and finish station, stray drips of glue and finish pop off without any trouble.

The top is attached to the frame before the laminate goes on, as in detail 'b.' To prevent the screw holes from telegraphing through the laminate, I filled them (Figure 1). An oversize piece of laminate is applied with contact cement. A hand-held router makes quick work of trimming the laminate flush, as in Figure 2.

CASTERS. One other addition is a set of swivel casters added to the underside of the lower shelf. This way, you can position the table to reconfigure your workshop to suit a wide variety of tasks. On the next page, you'll see a way to lock the table in place.

How-To: APPLY LAMINATE

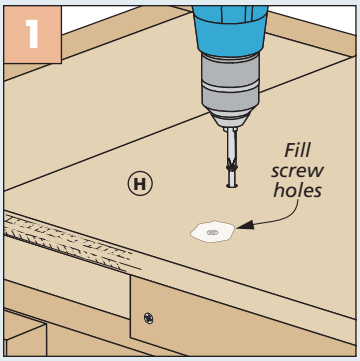

Smooth. Fill the screw holes with wood filler and sand the surface smooth.

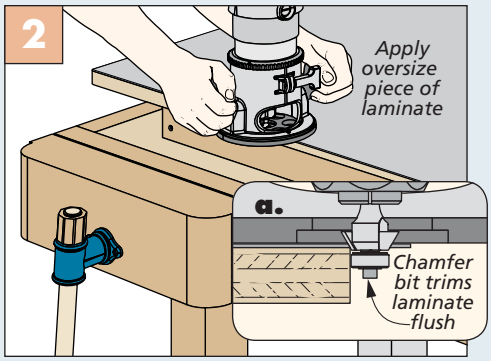

Trim & Chamfer. A chamfer bit trims the laminate flush with the top and eases the edge in one simple step.

Heavy-duty LEVELERS

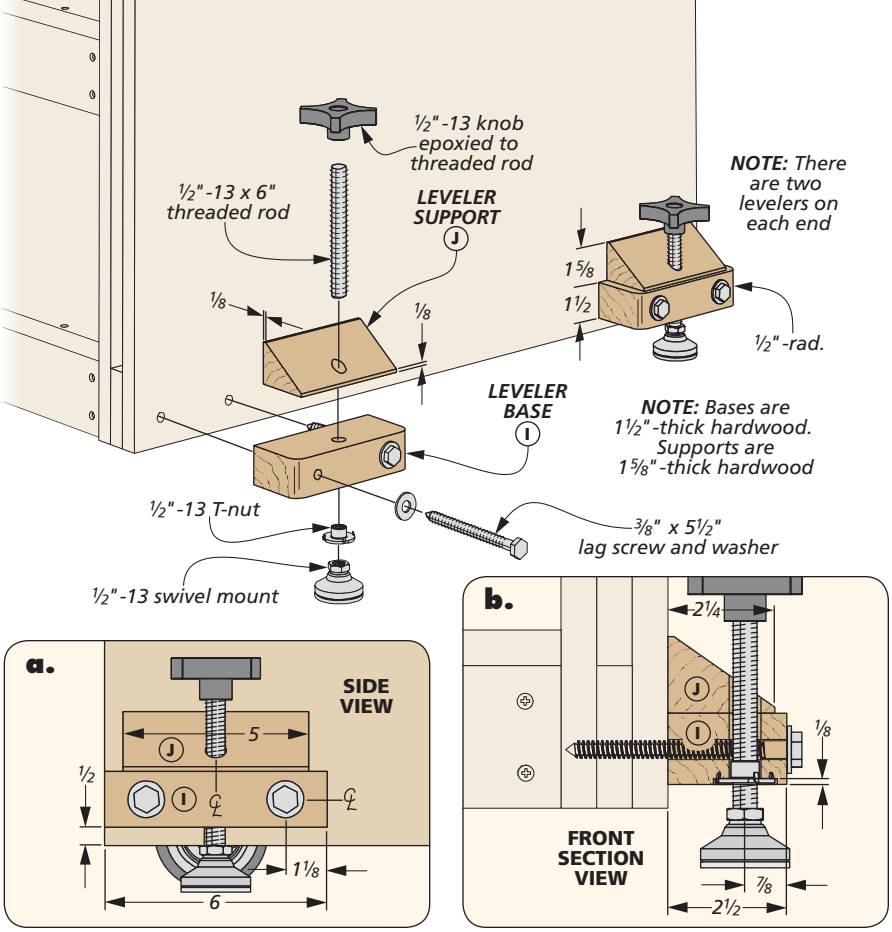

Casters are great for rolling a large table like this around the shop. But when you want to use it as an outfeed table, the casters may lead to the table shifting. Also, if your shop is anything like mine, the floor is uneven. That can cause problems when trying to align the outfeed table with the top of your saw table.

What's needed is a way to park the table securely and easily level it with your table saw. There are commercial levelers available, but considering the weight of the table and any workpieces on it, those solutions just wouldn't work.

Instead, I came up with a shop-built leveler that combines two stout wood blocks with heavy-duty hardware. The result is an easy-to-adjust system that's also strong and stable.

HARDWOOD BLOCKS. Building the levelers begins with the two hardwood pieces — the base and support. Since the levelers are attached to the ends of the table, it's a good idea to round the corners of the base to ease the sharp edge.

The base has a pair of mounting holes drilled into the edge. While you're at the drill press, you can drill the counterbore and through hole to accept a T-nut and a length of threaded rod, as you can see in detail 'b' and Figure 1 below.

The second hardwood piece reinforces the base to keep it from flexing under the weight of the table, as in detail 'a.' The upper surface is beveled to provide clearance, as shown in detail 'b.' After gluing the two blocks together, take a look at Figure 2 to see how to extend the hole through the support block.

SOME HARDWARE. Now it's time to add the hardware. First, a T-nut is tapped into the counterbore. The adjustable portion of the leveler consists of a piece of threaded rod, a large knob, and a swivel mount. The size of the knob makes positioning the leveler much more comfortable. I cut a length of threaded rod and attached a knob to one end with epoxy. Once the epoxy cures, thread the rod through the block and add the swivel mount on the opposite end (drawing above).

To attach the leveler to the table, I used long lag screws. These thread into all three layers of the end assembly for the strongest connection, as in detail 'b.'

How-To: MAKE THE LEVELERS

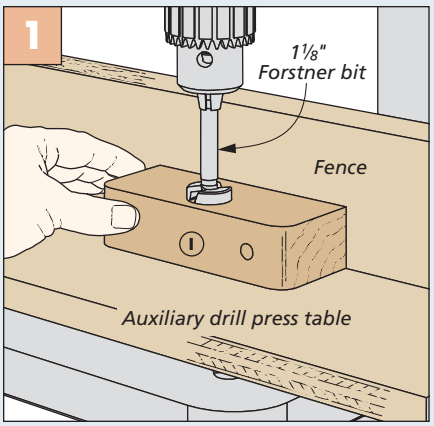

Drill It. Drill the counterbore for the T-nut first, then use the centerpoint to drill the through hole.

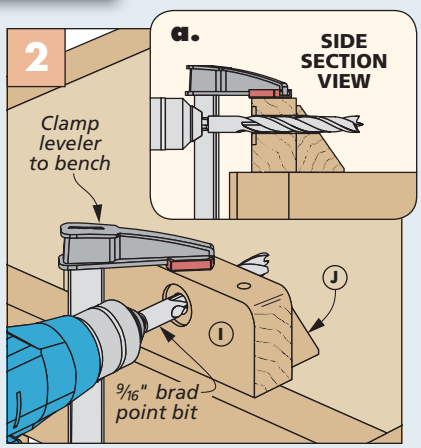

Support Hole. After gluing up the base and support, use the existing hole as a guide to complete the hole.

CRADLES

The feature that sets this project apart from an ordinary outfeed table is the system that helps you lift heavy sheets of plywood or MDF onto your table saw with less effort. The surprising solution comes in the form of two cradles shown in the drawing on the next page. The cradles slip into the pockets in the ends.

A foot formed at the bottom of the cradle provides a place to set the sheet and give you clearance for your hand below.

The curved profiles of the cradles support some of the weight of the sheet as you lift and swing it to the table top. From there, you can slide it into position on the table saw to make a cut.

MAKE THE CRADLE. Due to the size and shape of each cradle, you can't cut them out at the table saw. Instead, you shape just one then use the technique on page 65 to make a duplicate.

For the first cradle, lay out the various shapes on a blank that matches the overall length and width of the finished cradle. The lower right drawing has the details.

With the layout complete, make the cuts with a jig saw. I recommend using a fine-tooth blade rated for making "clean" or "extra-clean" cuts. These blades leave a fairly smooth surface that reduces the amount of sanding you need to do. Cut as close as you can to the layout lines in slow, steady passes.

The drawing below shows the process I used to make the handholds. Then remove any blade marks and smooth the cut edges with files and sandpaper.

LAMINATE EDGING. I didn't want the cradles to mar the surface of the sheet goods as I hoisted them up, so I applied strips of laminate to the curved edges. To do this, cut strips of laminate that are just slightly wider than the thickness of the plywood. Glue them in place with contact cement, working from the bottom to the top. A file makes quick work of trimming the excess laminate flush with the faces of the cradle.

SIMPLE SHELF. A shelf just below the top holds the cradles when you aren't using them. This shelf does't need to be as rugged as the others, so it's made from a piece of plywood screwed to hardwood cleats, as shown in details 'a' and 'b.' The shelf is centered side-to-side in the table.

After all the plywood cutting you've done to build this outfeed table, you'll realize just how helpful this project will be the next time you tackle a plywood project. Your back will thank you. W

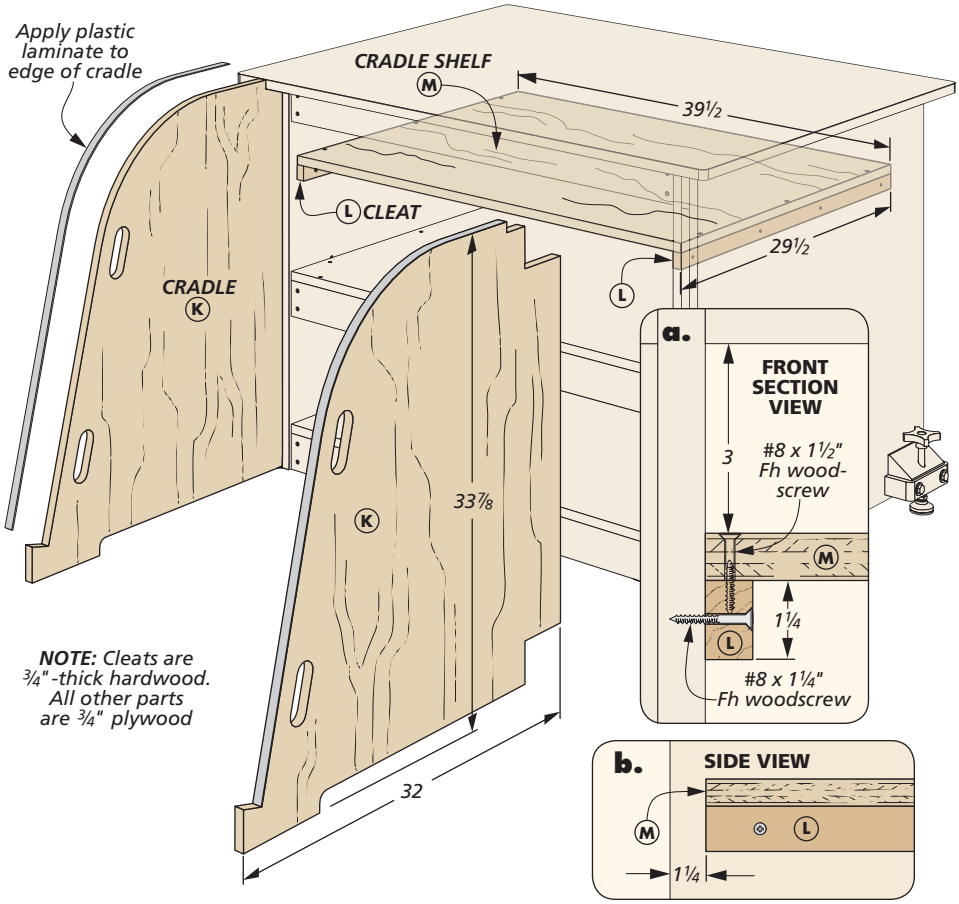

How-To: CREATE HANDHOLDS

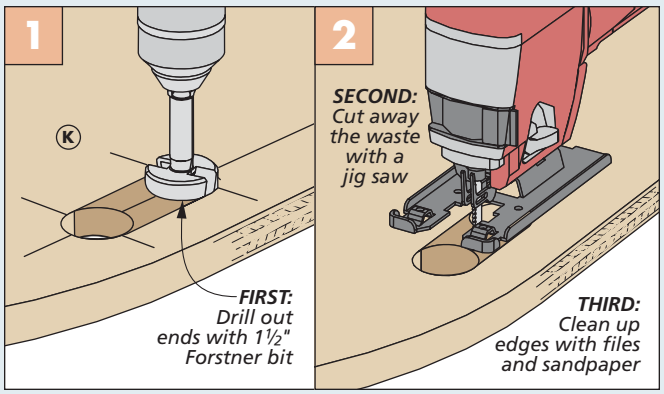

Cut Out Handholds. A Forstner bit creates smooth curves at each end of the handholds and provides access for a jig saw blade to cut away the waste.

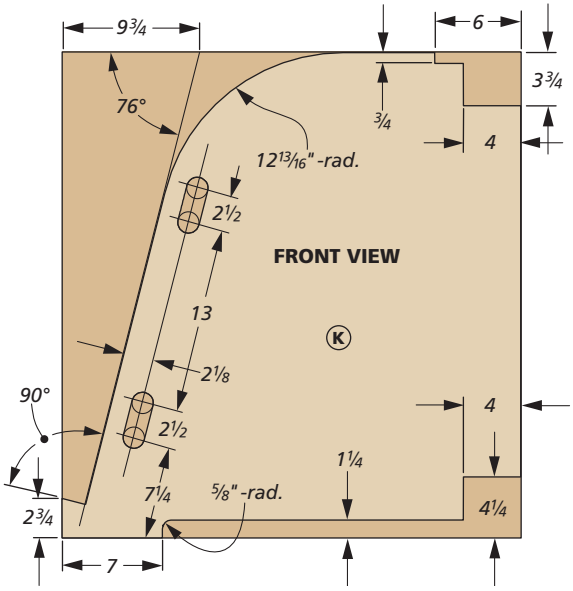

Designer Project

Knock-down Shelving System

This set of shelves uses a clever design of interlocking notches and keys that make it a snap to set up or take down. It's sure to be a fun weekend build.

Big, towering, and ornate bookcases and shelving units certainly have their place in the woodworking pantheon. But every once in awhile, you just need something simple and useful. This little knock-down shelving system was designed and built with exactly that sentiment in mind.

SIMPLE DESIGN. As you can see, there isn't a whole lot in the way of parts to this setup. A set of four frames provide the basic structure, while shelves that are each made from two thick maple planks pass between the frames.

FASTENER-FREE ASSEMBLY. But the unique part of the system is how it's assembled. When they're butted together, the shelf planks are narrower than the openings in the frame and pass through them easily. Then, driving hardwood keys into grooves at the ends of the planks spreads them apart. Notches cut in the outside edges engage with the frame stiles to lock it all together. If you ever need to take the shelving system apart to move it, you can simply tap out the keys, remove the shelves, and it all breaks down neatly into a tidy stack of frames and boards for storage or transport.

Construction Overview / OVERALL DIMENSIONS: 63"W x 38"H x 14¾"D

Each frame is made up of two stiles and eight rails

Shelf planks made from 1"-thick maple

Frame rails and stiles joined with stub tenons and grooves

Bookends slide in the opening between the planks and lock securely with threaded knobs and washers

Keys spread the shelf planks apart to lock the entire system together

Padauk filler strips make it easy to position rails and provide a nice contrast with the cherry frame

Notches in shelf planks lock into the frame stiles

▲ Hardwood keys are the secret to the shelving system's construction. They spread the shelf planks apart, locking the notches on the shelf planks into the frame stiles.

▲ Bookends help to make the unit quite useful as a bookshelf. They slide in the space between the planks and lock down securely with threaded knobs.

Build the **BASIC FRAMES**

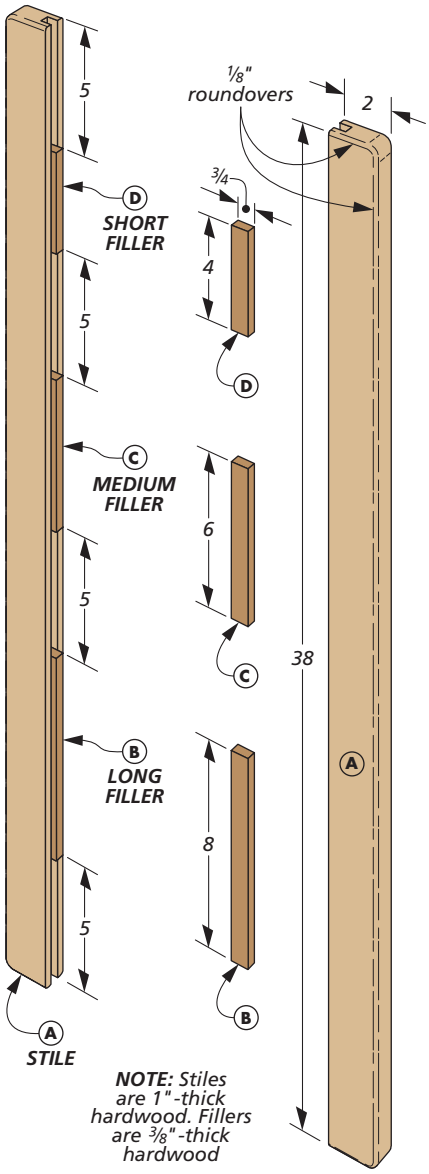

The framework of the knock-down shelving system consists of four frames that look like the ones you see in the main drawing on the next page. Each frame is made of two stiles that surround eight rails. They're joined to one another with stub tenon and groove joinery.

You'll also notice that the frame has a few additional parts, which are the filler strips shown in the drawing at left. These strips of varying length serve a couple of purposes for the shelving system. First, they fill the grooves in the stiles in between the rails. And second, they provide a handy method for aligning the rails as you assemble the frames later on by simply butting the rails against them.

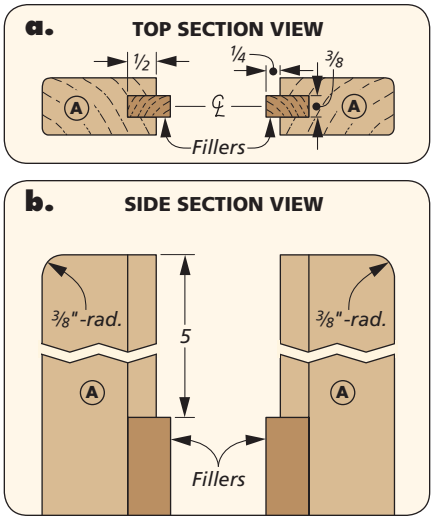

COMPLEMENTARY WOODS. To give the shelving system a stylish look, I used a few different types of hardwood with complementary colors. That started with the frames, where I made the rails and stiles from cherry, and then the filler strips from an exotic wood known as padauk. Since these parts are fairly small, I didn't have to buy a large, expensive board to get all the padauk I needed for the shelf. Later on, you'll note that I also made the keys from padauk. And the shelf planks are made from thick slabs of maple.

GROOVE THE STILES. After cutting all the stiles to size from 1"-thick cherry, the first order of business is to cut centered grooves in the inside edge of each of them. A simple method for ensuring centered grooves is to cut them in two passes, flipping the workpiece end for end between the passes. Figure 1 in the box below provides the details. You'll also want to note that the final grooves are 3/8"-wide, so I set up a 1/4" dado blade in my table saw to cut them.

ROUT RADII. As detail 'b' shows, a 3/8" radius adorns the outside-facing corners of each stile. Before doing any assembly work, it was easy to clamp all the stiles together in order to rout these radii using a roundover bit (lower middle drawing).

FILLER STRIPS. Now you can move along to the padauk filler strips that fill the

How-To: SHAPE THE STILES & INSTALL THE FILLERS

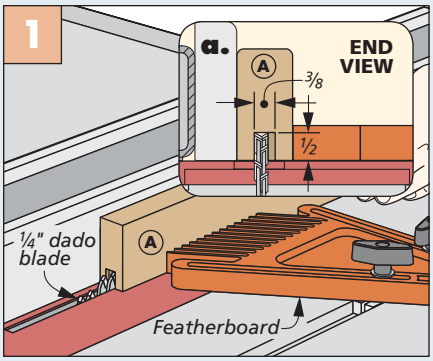

Centered Grooves. After the first pass, flip the stile end for end to cut a centered groove in the piece.

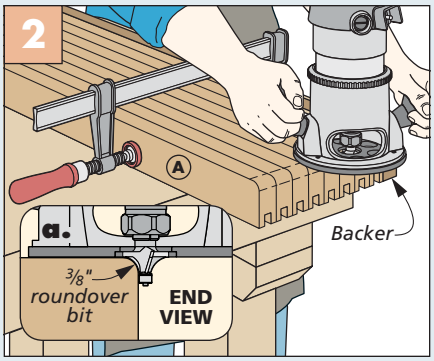

Radius. Stacking the stiles and routing a roundover along the corners is an easy way to form all the radii.

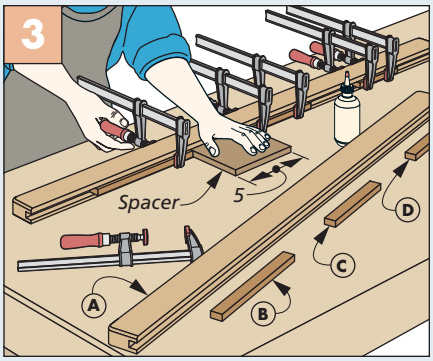

Install Fillers. A spacer block allows you to position the filler strips properly as you glue and clamp them in place.

grooves in the stiles. I started by planing a board down to thickness until it fit nicely in the grooves in the stiles. After ripping some longer strips to width, I used a stop block attached to an auxiliary fence on my miter gauge to cut the three different sizes of filler strips to consistent length.

FILLERS TO STILES. As mentioned earlier, the fillers establish the positions of the rails when you perform the final assembly of the frames. So the next order of business is to glue the fillers into the stiles at the correct locations. To help in this effort, I made some spacer blocks that matched the width of two of the rails plus the space between them (Figure 3, previous page). This allowed me to space the filler strips consistently as I glued them into the grooves in the stiles.

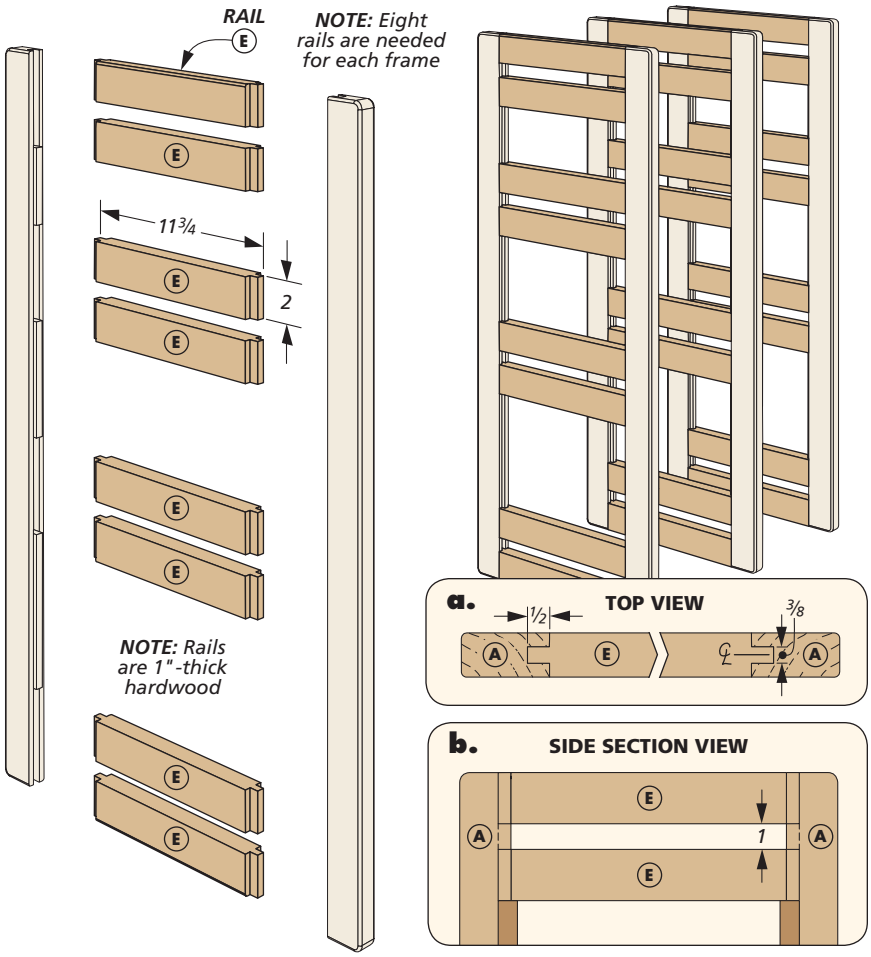

STUB TENONS ON RAILS

You can now turn your attention to the final components of the frames, which are the rails. Like the stiles, they're made from 1"-thick cherry. They have stub tenons on the ends to fit the grooves in the stiles.

Typically, I would cut stub tenons like these using a dado blade. However, a dado blade can leave an uneven surface on the tenon cheeks, and the top tenons on this shelving unit were going to be quite visible once it was all assembled. For that reason, I used a two-pass method to cut tenons with cleaner cheeks.

The method I used is shown in Figures 1 and 2 below. First, you establish the shoulder of each tenon before passing the rail through the blade on end to cut the cheeks. Details for the backer board I used to support the rails for this cut can be found in Shop Notes on page 65.

FINAL FRAME ASSEMBLY. Now all that's left is gluing the rails between the stiles to complete the frames. Figure 3 below has the details you need. Even though the fillers establish the rail locations, it's still helpful to have some spacers on hand to force the rails up against the filler strips and hold them in position as you're applying the clamps.

How-To: CUT TENONS & ASSEMBLE THE FRAMES

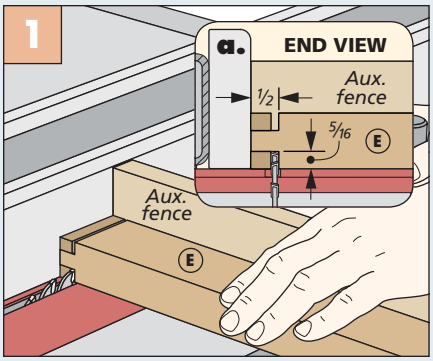

Stub Tenon Shoulders. Use the rip fence to establish the position of the tenon shoulders before cutting.

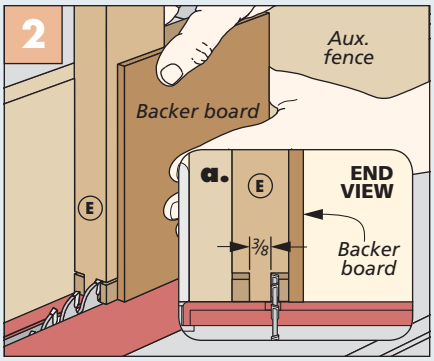

Stub Tenon Cheeks. This backer board (page 65) supports the rails vertically as you cut the tenon cheeks.

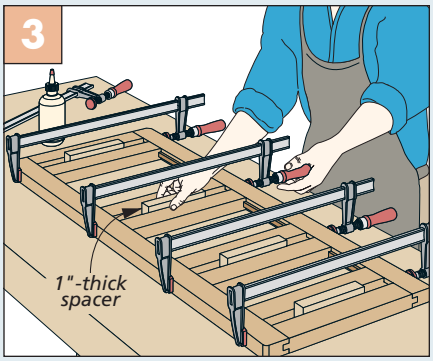

Frame Assembly. Spacers help to hold the position of the rails as you glue and clamp the frame together.

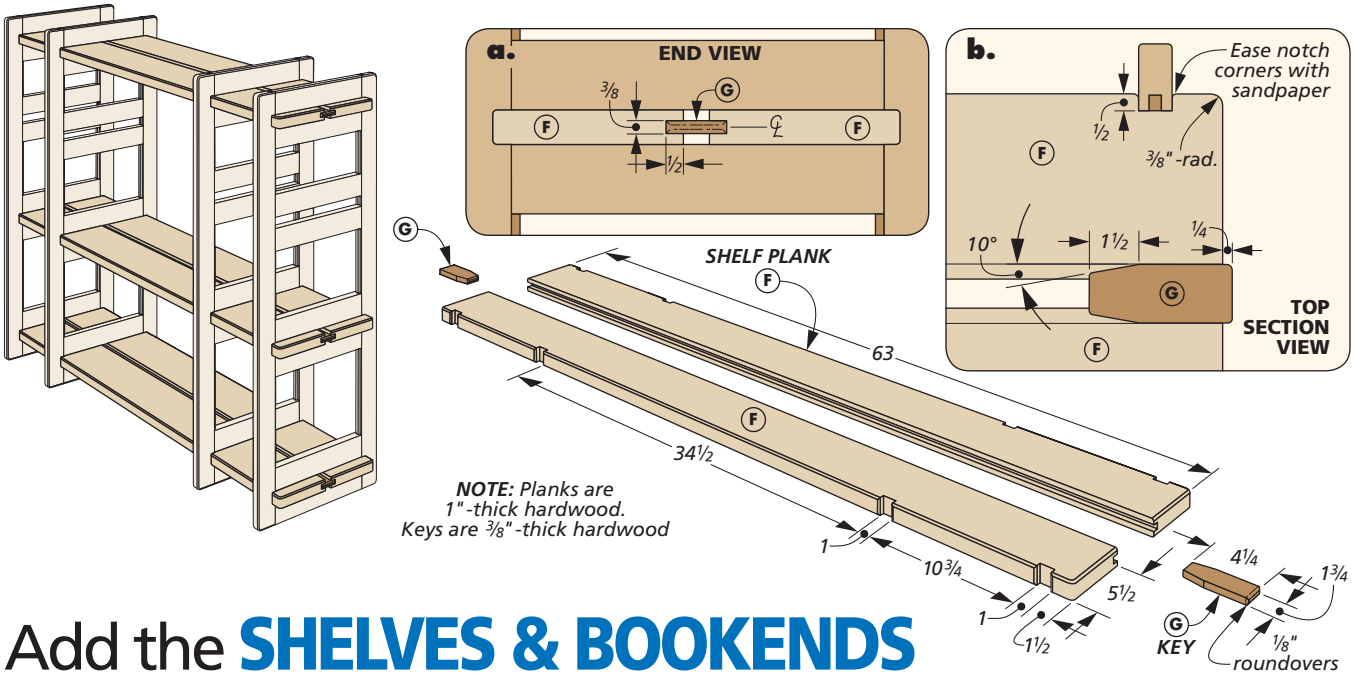

Add the SHELVES & BOOKENDS

With the frames assembled, you can turn your attention to the remainder of the parts that make up the shelving system. Those include the shelf planks, keys, and adjustable bookends.

START WITH THE SHELVES. The four shelves are each formed from two maple planks. After cutting them to size, I formed a groove along the inside edge of each to accept the key later on. These grooves can be cut in the same manner as those on the frame stiles, as shown in the lower left drawing on page 32.

NOTCHES. The next step is critical to how this shelving system is assembled, and that's the four notches formed on the outside edge of each shelf plank. As you'll recall, later on these will lock against the inner edges of the frame stiles to hold the entire unit together.

To cut the notches, I stood each plank on edge and passed it over a dado blade. Each notch is wider than the full width of a dado blade, so cutting them required two passes each. I used the setup shown in Figure 1 below to make forming the notches a precise and efficient process. After cutting them all, I sanded a slight radius on the edge of each notch so that they would seat better against the stiles.

RADIUS. The last step to complete the planks is to form a radius along all the outside-facing corners. Here again, you can shape these in the same manner as you did for the stiles (refer to the lower middle drawing on page 32).

KEYS. Like the fillers in the frames, the keys are made from the exotic wood padauk for a nice contrast with the

How-To: NOTCH & INSTALL THE SHELVES

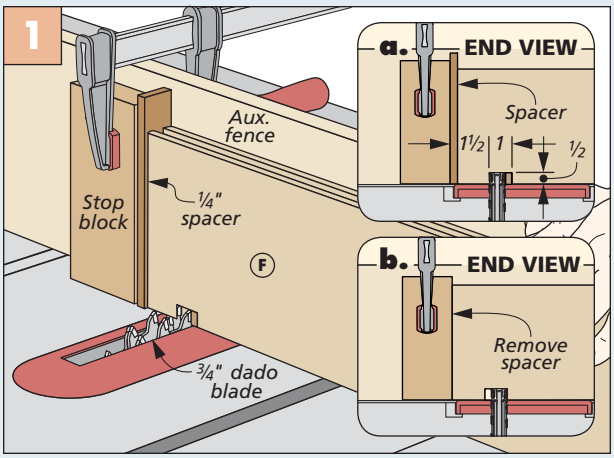

Notches. An auxiliary miter fence with a stop block and spacer is the trick to cutting the 1"-wide notches. Remove the spacer after the first pass to complete the notch.

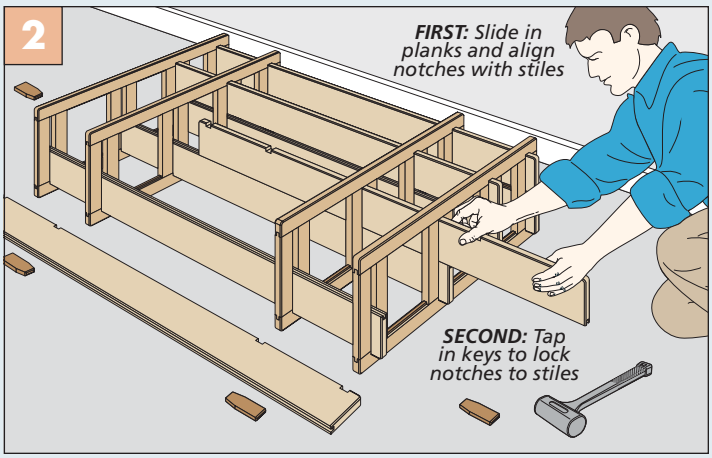

Assembly. It's easiest to assemble the shelving system with the frames positioned on edge. Carefully slide in the shelf planks and align the notches with the stiles before driving in the keys.

maple planks. You'll want to start by planing stock down for a snug fit in the grooves in the planks. Then rip the pieces to width before using a miter auxiliary fence with a stop block to crosscut them. I trimmed the angle on the front corners at the band saw before sanding the keys smooth and rounding the outside ends of each.

SHELVING SYSTEM ASSEMBLY. After applying a finish to the components, you're ready to put your shelving unit together. Figure 2 on page 34 provides a good overview. Once everything is aligned properly, use a mallet to tap in the keys, which in turn seats the notches over the edges of the stiles to lock the assembly together.

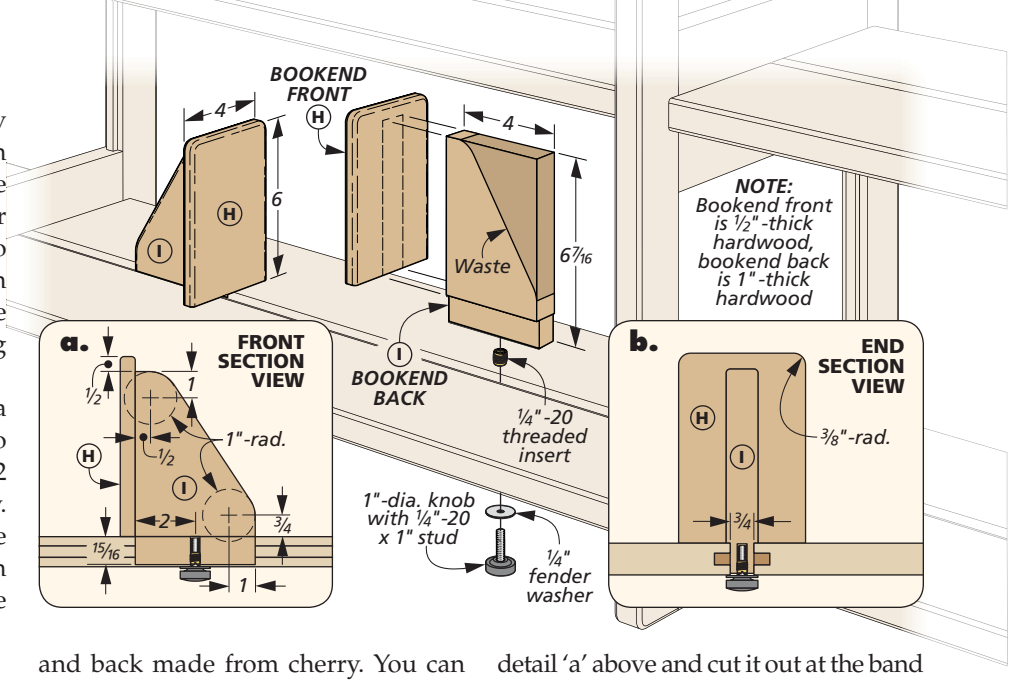

BOOKENDS

If you want to use your shelving system for storing books, these bookends are a useful addition. Each consists of a front and back made from cherry. You can make as many pairs as you desire.

After cutting the bookend fronts and backs to overall size, the first thing I did was drill a hole and install a threaded insert in the bottom end of the bookend back (photo at left). This is easier to do with a thick, square blank. Then rabbet both faces of the bottom end of the bookend back to fit the space between the two shelf planks. You'll want it to slide smoothly in the groove with little play.

With that done, I laid out the profile on each bookend back as shown in detail 'a' above and cut it out at the band saw. After sanding it smooth, I rounded the ends and edges of both parts before gluing and clamping them together.

A studded knob and washer fit the threaded insert and allow you to lock the bookends in place (detail 'b'). Loosening the knob allows you to slide and reposition the bookend easily.

This simple, clever shelf is sure to find a useful spot somewhere in your home. In fact, you might find that you'll want to build several of them for kids' rooms, your own room, or even the living room. And if you ever need to move it somewhere, like off to college, it will break down easily and stack nicely for transporting. W

◄ The drill press is great for driving threaded inserts in straight. Refer to page 65 for more on this setup.

Materials, Supplies & Cutting Diagram

A	Frame Stiles (8)	1 x 2 - 38	**D**	Short Fillers (8)	3/8 x 3/4 - 4	**G**	Keys (8)	3/8 x 1 3/4 - 4 1/4
B	Long Fillers (8)	3/8 x 3/4 - 8	**E**	Frame Rails (32)	1 x 2 - 11 3/4	**H**	Bookend Fronts (2)	1/2 x 4 - 6
C	Medium Fillers (8)	3/8 x 3/4 - 6	**F**	Shelf Planks (8)	1 x 5 1/2 - 63	**I**	Bookend Backs (2)	1 x 4 - 6 7/16

- (2) 1/4"-20 Threaded Inserts
- (2) 1/4" Fender Washers
- (2) 1"-dia. Knobs w/1/4"-20 x 1" stud

1"x 6" - 72" Hard Maple (Eight boards @ 3.0 Bd. Ft. each)

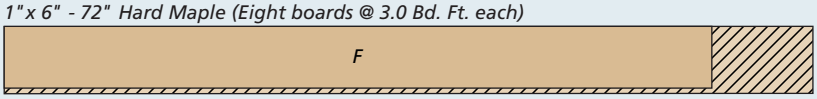

1"x 6 1/2" - 96" Cherry (Two boards @ 4.3 Bd. Ft. each)

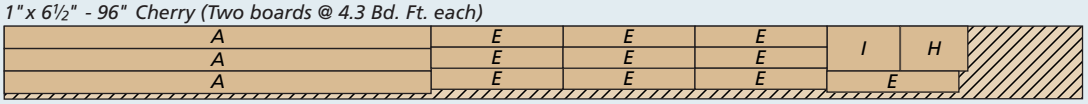

1"x 6 1/2" - 84" Cherry (3.8 Bd. Ft.)

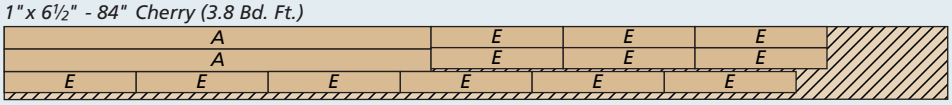

***NOTE:** Parts B, C, D, G, and H are planed to final thickness*

1/2"x 3" - 96" Padauk (2.0 Sq. Ft.)

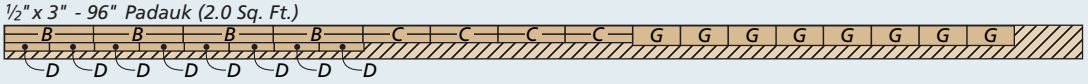

Shop Project

Multipurpose Workstation

Rock-solid, practical, and inexpensive — it's tough to beat this versatile workstation that you can make from one sheet of plywood.

I don't think a woodworker can ever have enough work space. But building a permanent bench or table just makes the shop more crowded. That's where this handy multipurpose workstation comes to the rescue.

This knock-down workstation can be made in a few hours. It's simple, yet the strong design makes it useful around the shop, house, or outdoors. You can set up this workstation in almost no time at all. And it can be assembled to sit at two heights. Use it in the low position as an assembly or finishing table. Or for cutting sheets of plywood down to size with your circular saw. At the high position, you'll have another workbench or miter saw station. Add the practical accessories on the following pages, and you can set up shop almost anywhere.

► Interlocking notches between the rails and legs make this station a snap to assemble or disassemble.

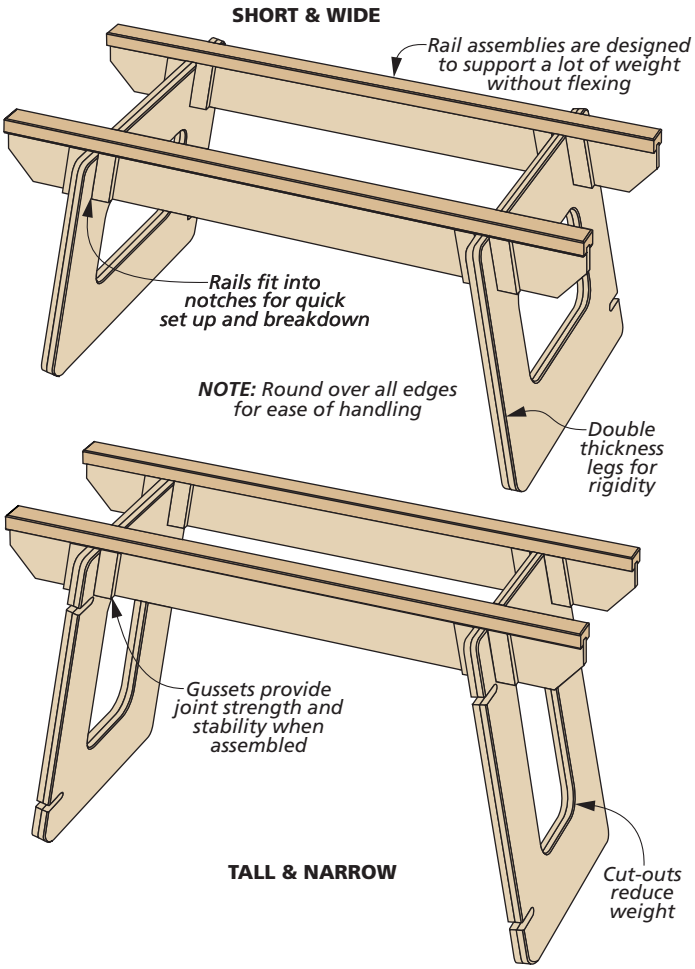

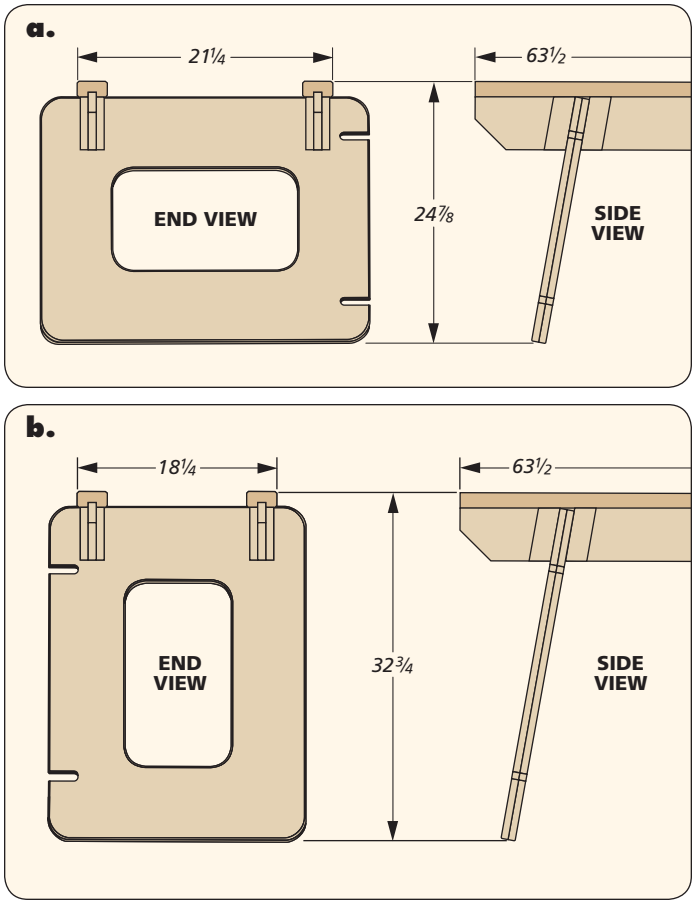

A height-adjustable **STATION**

Take a look at the drawings on this page, and you'll see how versatile this workstation really is. The two rectangular legs are connected by rails that fit into notches. The legs are notched on two sides to create two working heights. And they're laminated from two pieces of plywood for added strength.

You can also change the length of the rails if you desire. I made the long rails shown above for mine, but it'd be simple to adjust their length to suit a smaller (or bigger) workspace.

Building this workstation isn't difficult to do. You'll need a circular saw or a table saw to cut the plywood down to size. And you'll also need a drill, a router, and a jig saw to shape the legs and make the notches in the legs and rails. But the best part is, you can make all the parts shown above using a single sheet of plywood and a couple of 2x4s. You'll see how all the pieces go together starting on page 38.

Materials & Supplies

Workstation		
A	Legs (2)	1½ ply - 23½ x 31½
B	Rails (2)	¾ ply - 5½ x 63½
C	Caps (2)	1½ x 2½ - 63½
D	Gussets (16)	¾ ply - 2 x 5
E	Worksurface (1)	¾ ply - 31½ x 63½
F	Cleats (4)	¾ x 1 - 63½
Miter Saw Station		
G	Miter Saw Platform (1)	¾ ply - 24 x 24
H	Platform Cleats (4)	¾ x 1 x 24
I	Outfeed Base (2)	¾ ply - 6 x 21¾
J	Outfeed Cleats (4)	¾ x 1 x 6
K	Outfeed Supports (2)	1½ x 3¼ x 20¼
Planer Station		
L	Planer Platform (1)	¾ ply - 19 x 21¾
M	Platform Blocks (4)	¾ ply - 5 x 5
N	Platform Cleats (2)	¾ x 1 x 19
O	Outfeed Base (2)	¾ ply - 6 x 21¾
P	Outfeed Cleats (4)	¾ x 1 x 6
Q	Outfeed Supports (2)	1½ x 2⅝ x 20¼
Table Saw Station		
R	Saw Platform (1)	¾ ply - 25½ x 30½
S	Platform Blocks (4)	¾ ply - 5 x 5
T	Platform Cleats (2)	¾ ply - 1 x 25½
U	Outfeed Base (1)	¾ ply - 12 x 30½
V	Outfeed Top (1)	¾ ply - 12 x 30½
W	Outfeed Sides (2)	¾ ply - 9¼ x 11¼
X	Outfeed Fronts (2)	¾ ply - 6 x 11¼
Y	Outfeed Mntg. Cleats (2)	¾ ply - 2 x 9¼
Z	Outfeed Cleats (2)	¾ ply - 1 x 12

- (50) #8 x 1½" Fh Woodscrews
- (20) #8 x 1¼" Fh Woodscrews
- (1) 12" x 30½" Sheet Plastic Laminate

Building the LEGS & RAILS

The legs are each made up of two pieces of plywood (main drawing at right). To make the legs lighter and easier to clamp during glue-up, I cut out the center portion on the four pieces. To get good results, I drilled out the corners on one of the pieces of plywood, cut it to rough shape with a jig saw, and sanded the opening smooth. Then I used that piece as a template to flush-trim the other pieces to identical shape with a router. (You'll find tips on flush-trimming parts in Shop Notes on page 65.)

NOTCHES. Now you can turn your attention to the notches for the rails. Each of the legs has two pairs of notches. The best way I found to form the notches was to first drill a ¾"-dia. hole at the base of each notch, as in detail 'a.' Then you can cut out the waste with a jig saw.

PAIR OF RAILS. The rail assemblies are a piece of plywood with a 1½"-thick cap (refer to the box below). They're built like an I-beam for strength.

Start by cutting the rails to width and length, and trim off the bottom corners. Then mark the locations for the notches. Note that these notches are angled at 80° from the bottom edge. This splays the base of the legs out, which makes the platform more stable.

You'll make the notches like you did for the legs, by drilling a hole and cutting out the waste with a jig saw. But you'll need to make these notches wider to fit the legs. Finally, for the rail cap, I ripped a 2x4 to width and cut a ¾" groove on the bottom face to fit over the rail. Chamfer all the edges and glue it in place.

GUSSETS. The gusset pieces are angled to provide support for the legs when the workstation is assembled. I glued and clamped them in place on the rails to provide extra strength.

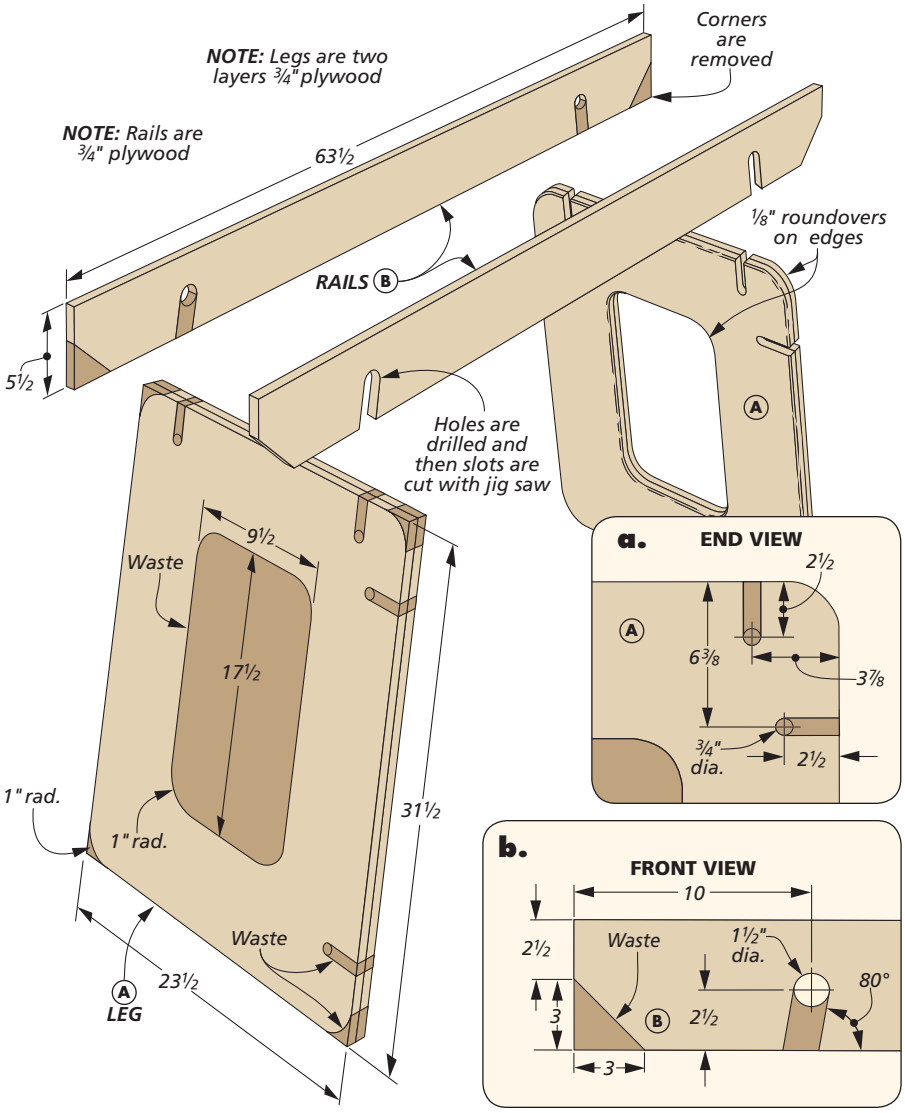

How-To: MAKE THE RAILS, CAPS & GUSSETS

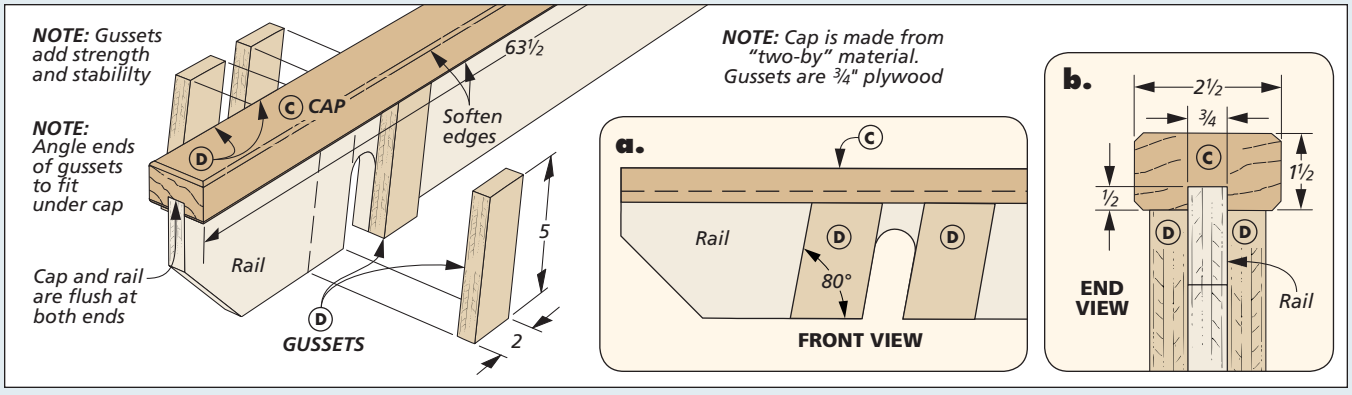

Easy-to-build **WORKSURFACES**

By itself, the workstation is great for projects around the shop and the house. But the accessories shown on the next few pages will make it even more versatile and useful.

WORKSURFACE. The first accessory I added was a simple worksurface. It's just a piece of plywood with some cleats to hold it in place on the rails (refer to detail 'a' at right). If you want to use the worksurface at both heights, you'll need to add the two sets of cleats shown in the drawing.

It makes a great assembly or finishing table for projects. Or, it's also a useful workbench when I need a little extra elbow room in the shop.

SACRIFICIAL SUPPORTS. The workstation can also come in handy when cutting down large sheets of plywood or other sheet goods with a circular saw. For this operation, though, you don't want to cut into your worksurface. So it's a good idea to remove it and simply lay down some scrap 2x4s across the rails (lower right photo). This supports the sheet and prevents it from falling to the ground as you cut.

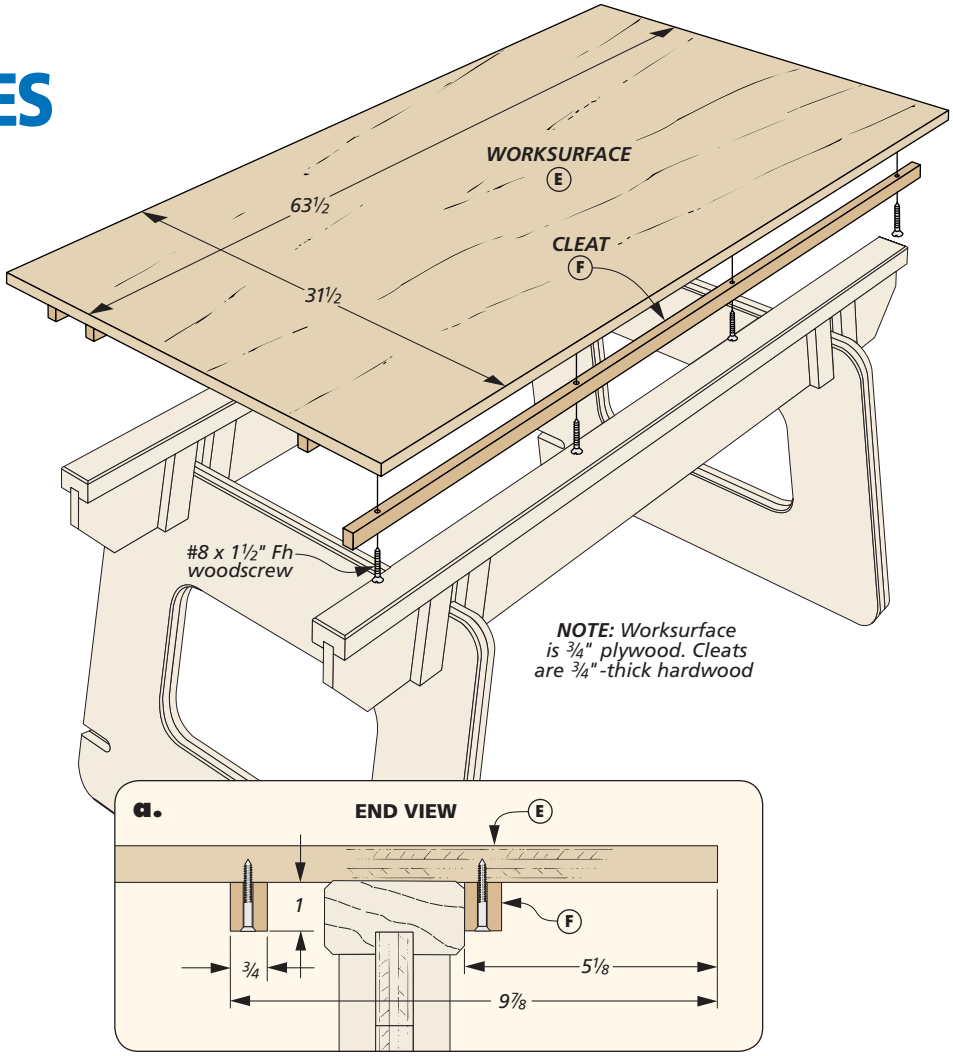

For a quick and easy finishing table or an extra workbench, a piece of plywood is all it takes. Cleats hold it in place, making for a sturdy worksurface.

Cutting plywood with a circular saw can be a chore without proper support. Simple 2x4 supports turn your workstation into a panel-cutting bench.

Miter saw & planer
TOOL STATIONS

To set up your portable workstation for a miter saw or planer, all it takes is a platform and some outfeed supports.

MITER SAW STATION. The platform for my miter saw is nothing more than a piece of ¾" plywood sized to fit the base of my saw. Cleats on the bottom fit along the rails of the workstation. And I added some cleats on top to keep the saw from sliding around (refer to detail 'a' at right).

The outfeed supports are easy to make, as shown in detail 'b'. The only trick is to make them the same height as your saw's table.

PLANER STATION. The platform for my benchtop planer station is a little different. It's also made from ¾" plywood and has cleats on the bottom. But instead of top cleats, it uses L-shaped platform blocks to hold the planer in position. These blocks are shown in detail 'a' on the following page.

To accommodate these L-shaped blocks, size your platform at least four inches larger than your planer's base in both directions. Finally, make sure the outfeed supports match the height of your planer's table (detail 'b').

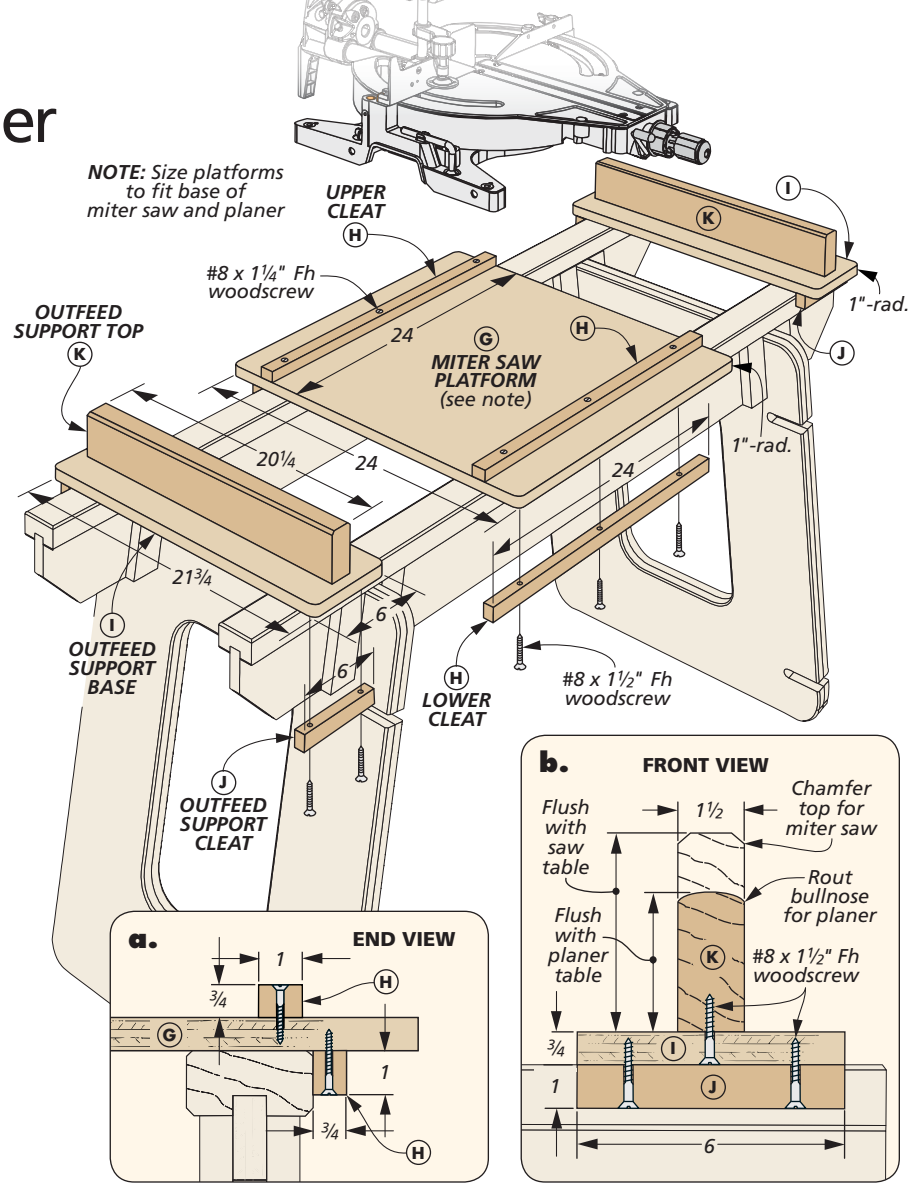

▲ A stable worksurface and outfeed support are necessities when using a portable planer. You get both with this easy-to-make accessory.

▲ Portability and quick setup make this miter saw stand a must-have for the shop. A solid platform and outfeed supports make for accurate cuts.

Dual-function
OUTFEED TABLE

With this platform and outfeed table for my benchtop table saw, I can now use the saw just about anywhere. And to make it even more useful, I mounted a router to the outfeed support to create a compact, portable router table.

TABLE SAW PLATFORM. The base for the benchtop table saw is just a piece of ¾" plywood with cleats on the bottom, like the other bases on page 40. You'll have to size your platform 4" larger than the base of your saw to accommodate the four L-shaped blocks in each corner (refer to detail 'a' at right). I rounded the corners of the blocks with a 1" radius before screwing them in place.

OUTFEED SUPPORT. The outfeed support shown on the right doubles as a handy router table. The important consideration is to make the final height the same as the height of your saw table.

Detail 'b' on the right shows how the outfeed support is just a bottom and top piece connected by a pair of front and side pieces. The top is covered with laminate for smooth operation.

To mount your router, use your router's baseplate as a template for locating the screw holes. W

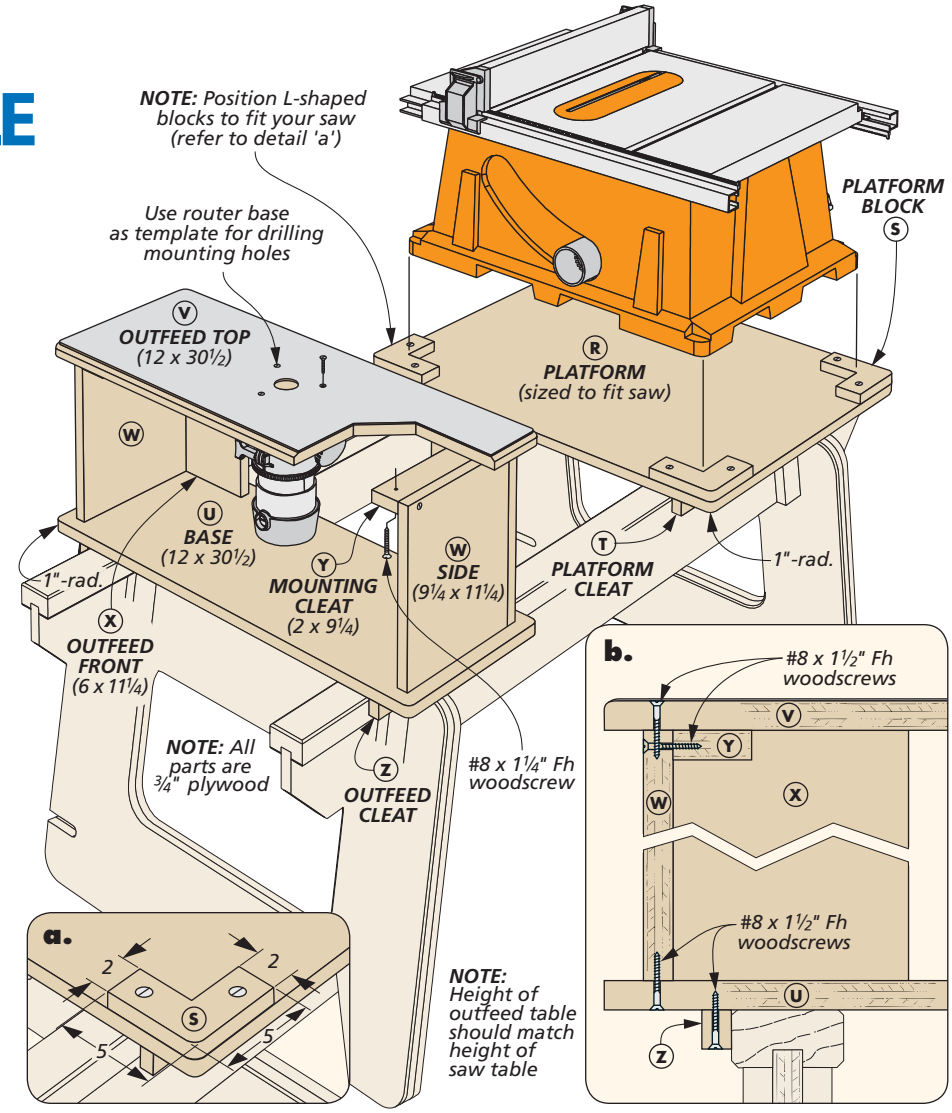

A handy plywood platform makes it easy to outfit the workstation with a benchtop table saw. Added outfeed support increases the capability of the saw for cuts.

To maximize shop space, you can create a portable router table by mounting a router to the underside of the table saw outfeed support.

Heirloom Project

Card Catalog Cabinet

Offering up plenty of storage and a convenient writing surface, this custom cabinet is reminiscent of the old card catalogs found in libraries.

Over the past couple of decades, as the nation's libraries switched to computer systems for tracking their collections, thousands of outdated card catalogs were cast aside. But many astute individuals recognized the excellent decorative (and functional) potential of these cabinets. Therein lies the inspiration for the design you see above.

PERIOD AUTHENTIC LOOK. This version has genuine label-insert pulls on the drawer fronts and a simple pull-out tray for taking notes. To accommodate the storage of larger items, the outer banks of drawers are double wide. And a sturdy, straightforward stand puts it at just the right height for any location in the home.

Construction Overview / OVERALL DIMENSIONS: 36⅜"W x 45⅞"H x 16½"D

Locking rabbets secure the drawer fronts to the drawer sides

A mitered frame and panel gives the rear of the cabinet a finished look

Six double-wide drawers maximize the storage capacity of the cabinet

Hardwood edging covers all of the exposed plywood edges

Leg blanks are glued up from thinner material

Stand parts connected with mortise and tenon joinery

Tapered legs are simple to cut on the band saw

NOTE: Refer to Sources on page 67 for hardware information

▲ The pull-out tray turns the card catalog cabinet into a writing desk. When done, simply push it back into the tray case for out of the way storage.

▲ The generous cutouts on the drawer sides mimic the shape of the original card catalog drawers.

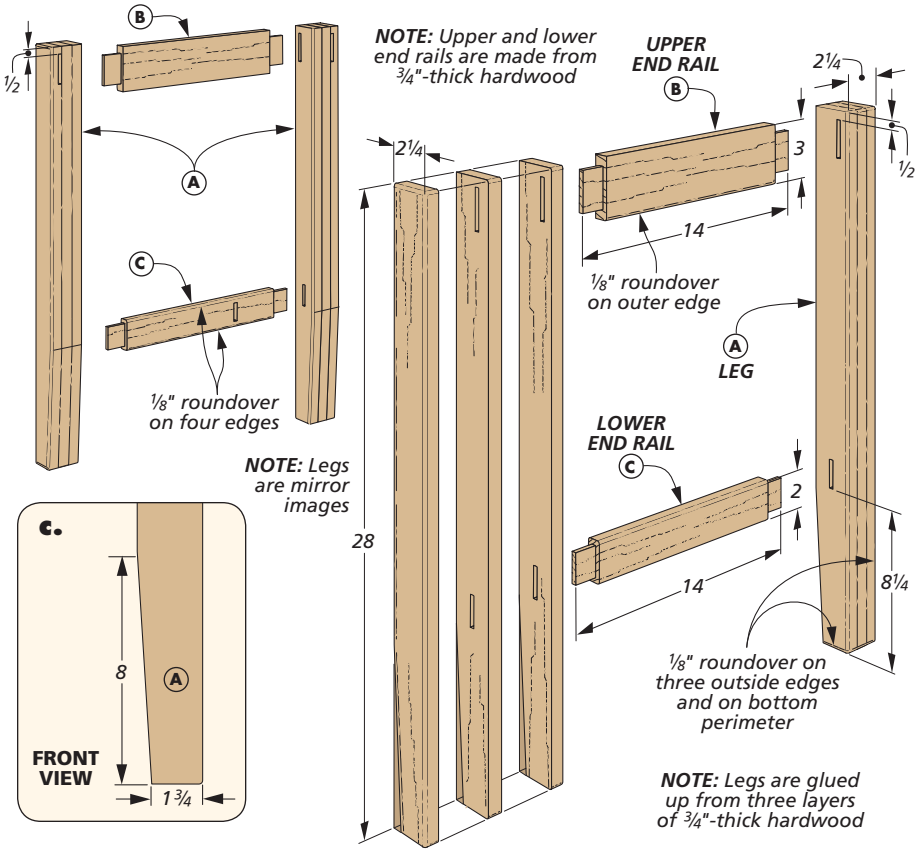

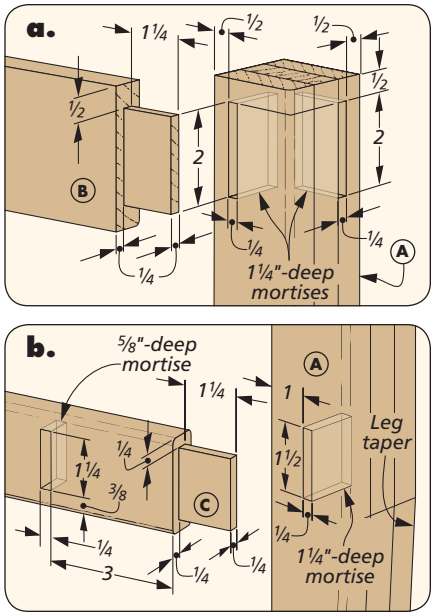

Begin with the **STAND**

The card catalog cabinet consists of three separate components: The upper case that holds the nine drawers, the tray case that houses the pull-out writing tray, and the stand that supports both assemblies. While the upper cabinet could be built as a stand-alone project and displayed on a table, I wanted my cabinet to be a freestanding piece of furniture. With that in mind, I started building the cabinet from the bottom up.

STURDY LEGS. Since the bulk of the project parts are made from ¾"-thick hardwood, I opted to glue up the leg blanks from this stock, as well. Leave the individual boards oversized and cut them to final size after the glue dries. Since the legs are mirror images, it's a good idea to label them now to help keep the joinery straight.

SOLID JOINERY. When completed, the weight of the upper cabinet, tray case, and drawers is quite substantial. For that reason, I went with mortise and tenon joints to construct the stand. You can use the drawing above along with details 'a' and 'b' to lay out the mortise positions on all four legs. To cut the mortises, I removed the bulk of

How-To: MAKE THE LEGS

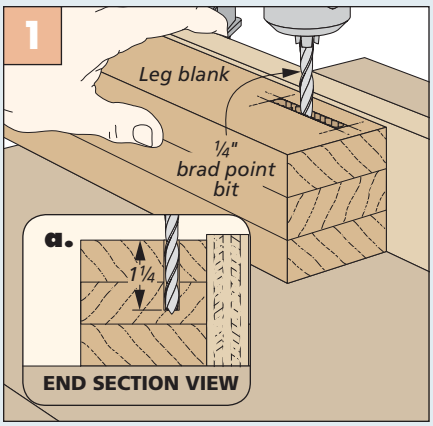

Drill Mortises. Remove the bulk of the waste for the mortises using a brad point bit at the drill press.

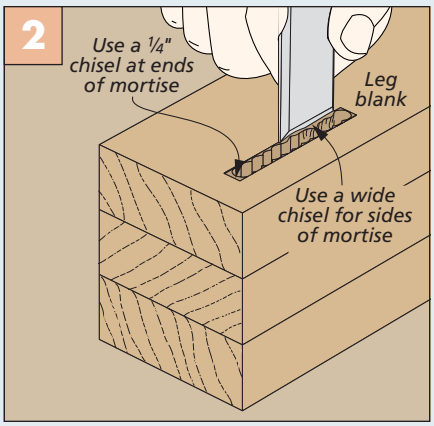

Chisel Work. With most of the material removed, use a pair of chisels to clean up the walls of the mortises.

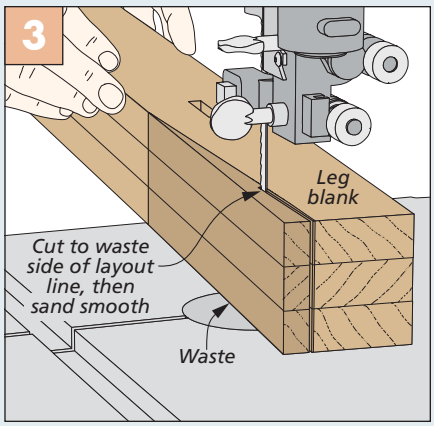

Taper Legs. The band saw makes quick work of cutting the taper on the lower portion of the legs.

the waste with a brad point bit at the drill press, as shown in Figure 1 at the bottom of the previous page. You can then clean up the mortise walls with a couple of chisels (Figure 2).

ELEGANT TAPERS. To lighten the look of the stand, I cut a taper on the inside face of each leg at the band saw. Detail 'c' and Figure 3 on the previous page provide the details. A sanding block makes quick work of cleaning up the saw marks.

END RAILS. Next up are the upper and lower end rails. Be sure to note these are different widths before cutting them to final size. The tenons on the ends of these four rails can easily be made using a dado blade at the table saw. Again, you'll want to keep in mind these tenons have different widths, as well.

I made the cheek cut on all of the rails, first (Figure 1). With the dado blade at the same height, I made the shoulder cuts on the lower end rails before raising the blade and making the shoulder cuts on the upper end rails (Figure 2).

Now cut a shallow mortise on the inside face of each of the lower rails to hold the stretcher later on. I used the same drill and chisel method that I used previously on the legs.

Before gluing up each end assembly, I took the time now to round over the edges on the legs and rails as shown in the drawings at the top of the previous page. With that done, clamp up each end assembly and set them aside to let the glue cure.

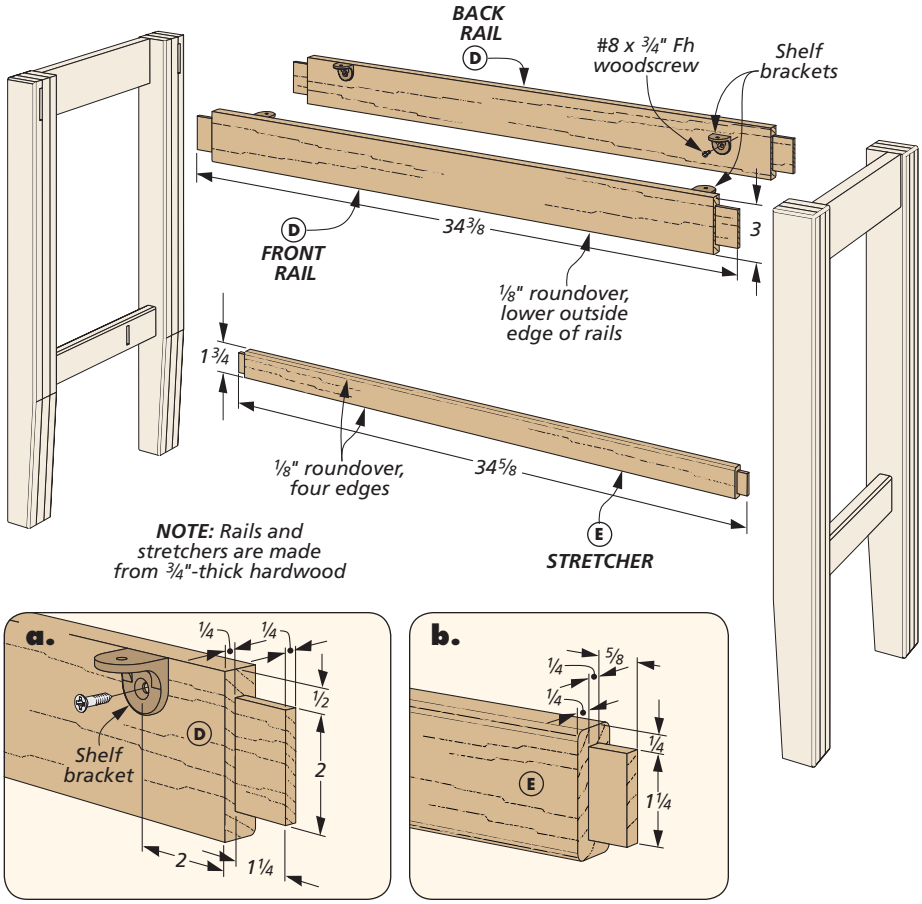

RAILS & STRETCHER

A pair of rails and a stretcher are used to hold the end assemblies together. Use the How-To box below to guide you through cutting the tenons on the ends of the rails and stretcher. Once again, I made all of the cheek cuts first, followed by the shoulder cuts on the stretcher. The shoulder cuts on the rails complete the process.

I softened the edges on these pieces, as well, using a roundover bit at the router table. Ease all four edges on the stretcher, but just the lower, outside edge on the rails (details 'a' and 'b' above).

ASSEMBLE THE STAND. Just a quick point before you bring the end assemblies together. It's important that the stand sit flat on the floor to prevent rocking. So after gluing the rails and stretcher in place and loosely applying the clamps, I positioned the stand on my flat workbench top and sat an oversized piece of plywood across the top. Some weight on top of the plywood (I used a couple of sandbags) keeps the whole thing stable and all four legs flat on the workbench. You can then tighten the clamps.

Finally, screw the shelf brackets to the inside face of the rails (detail 'a'). These are used to secure the stand to the tray case that sits on top.

How-To: CUT RAIL TENONS

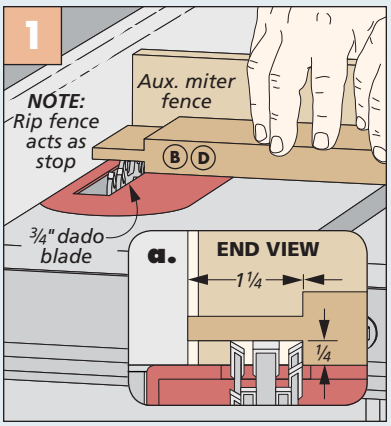

Tenon Cheeks. Use the rip fence to establish the length of the tenon as you cut the cheeks.

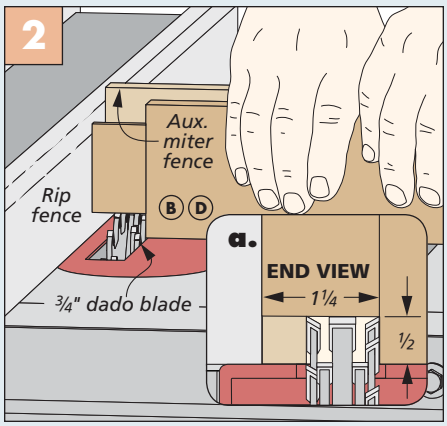

Shoulder Cuts. Using the same dado blade and fence setup, flip the rails on edge and finish up the tenons.

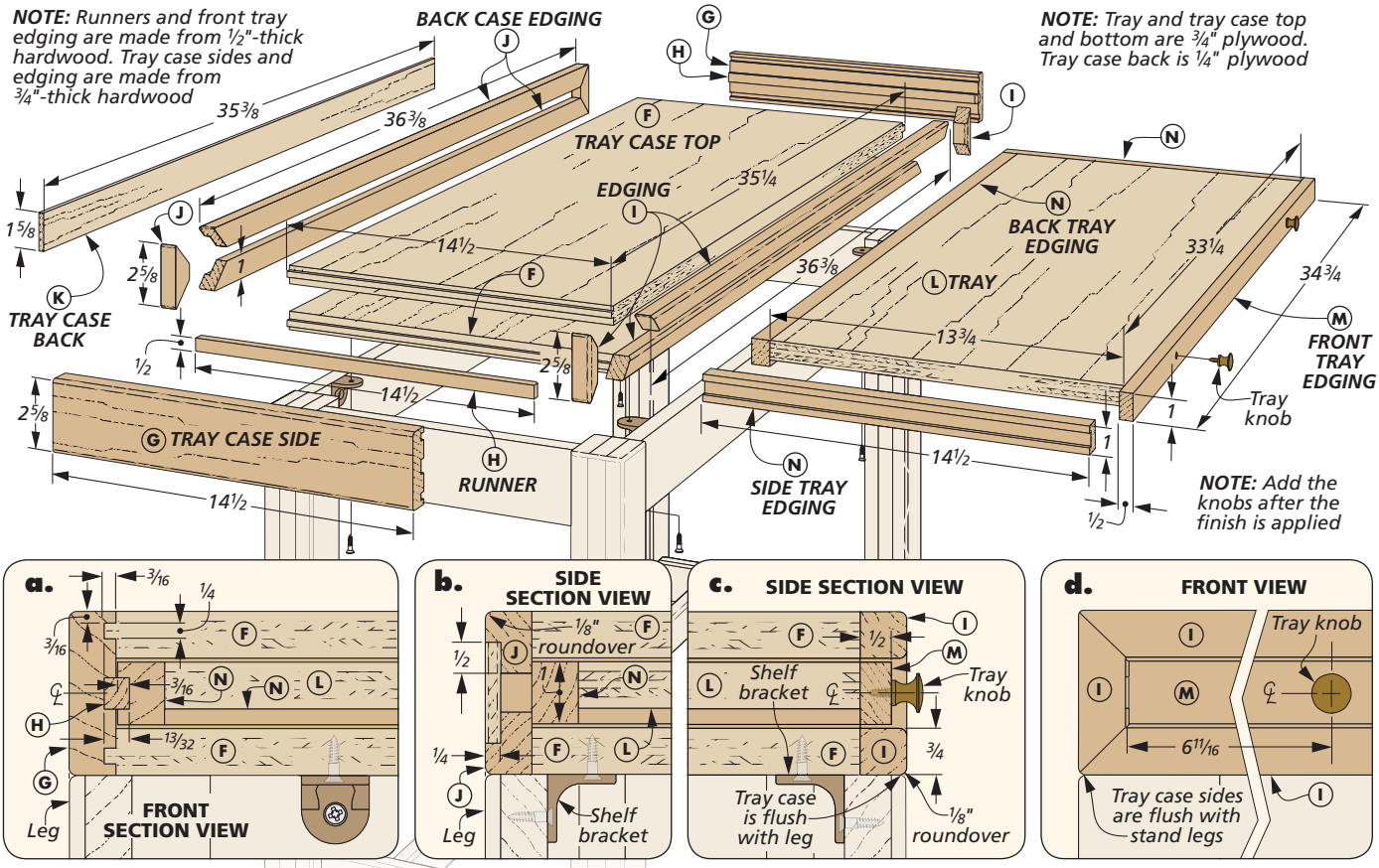

Constructing the TRAY CASE

With the stand completed, it's time to move on to the tray case and tray. As shown above, both of these assemblies consist of plywood panels with hardwood edging on the front, back, and sides to cover the plywood. Since the top and bottom panels for the tray case are cut from the same sheet of plywood as the tray, I decided to cut all of these plywood pieces to size at the same time. You can then set aside the panel for the tray for the time being.

RABBETS & GROOVES. The tray case top and bottom have tongues on the ends that fit in the hardwood sides. These are easy to cut at the table saw. Note that these tongues are offset, as shown in Figure 1 below.

How-To: CUT TRAY CASE RABBETS & GROOVES

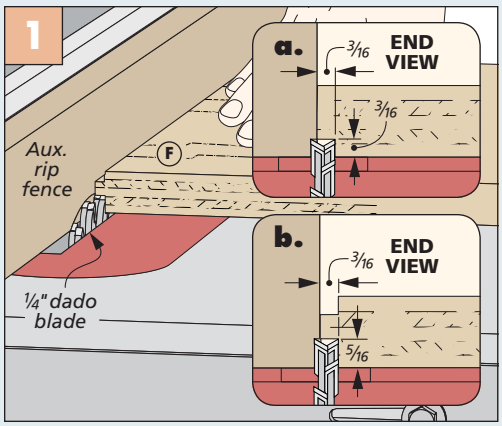

Form Tongues. Using a dado blade, cut the rabbets on the ends of the case top and bottom to form an offset tongue.

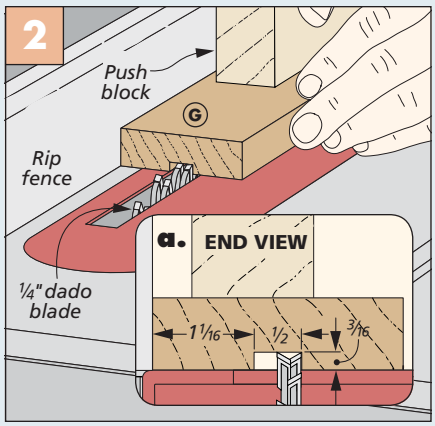

Groove. Flip the side end for end after the first pass and make a second cut to create the centered grooves.

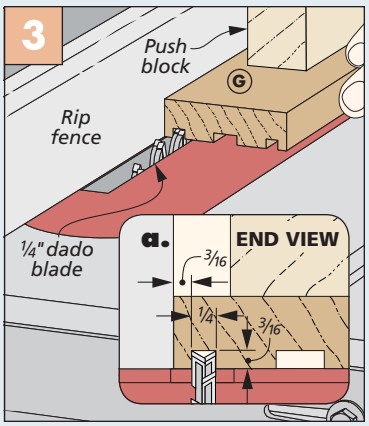

Tongue Grooves. Narrow grooves in the sides mate up with the tongues on the panels.

Now cut the two hardwood case sides to size. The centered groove (Figure 2 at bottom of previous page) holds the tray runner, while the narrower grooves shown in Figure 3 mate up with the tongues on the top and bottom panels.

ADD RUNNERS & ASSEMBLE. Before gluing up the tray case, you'll want to add the tray runners to the sides. Figures 1 and 2 at right cover this process. A slight chamfer on the front end of the runners allows the tray to slide smoothly without getting hung up.

Next, the sides can be glued to the top and bottom to form the basic case. Just a cautionary note here: You'll want to be careful when placing the glue in the narrow side grooves so that it doesn't squeeze out on the inside of the case. The small case opening makes it difficult to clean up after assembly.

HARDWOOD EDGING. Adding edging to the front and back edges gives the tray case a nice, finished look. So after cutting extra-long blanks for the front edging, I rounded over the front edges of each piece. Take your time mitering the ends of these pieces to sneak up on a flush fit around the perimeter of the case (Figure 3), and then glue them in place.

The edging at the rear of the tray case is slightly different. I wanted the cabinet to look good whether it's displayed against a wall or not. To that end, I created an edging strip with a rabbet on one edge (Figure 4). This rabbet houses a plywood back that mimics the look of the back of the drawer case you'll make next.

The ends of the back edging are mitered just like the front. Again, you're aiming for a flush fit along the back of the plywood edge. To keep an even space when gluing this edging in place, I added a small spacer (cut to the same width as the back) between the two long pieces of edging, as shown in Figure 5.

After the clamps come off, the case back is ready to be glued in place. At this point, I rounded over the edges of the case sides, including the ends of the front and back edging.

NOW FOR THE TRAY. The tray itself is a much simpler piece to make. It too has edging all around, but the pieces at the front and back are simply squared off. The edging strips on the sides of the tray receive centered grooves on the outside faces that fit over the tray runners. This groove should be wide enough to allow the tray to slide smoothly (Figure 6).

Glue the edging in place, starting with the back piece, then the grooved sides, and finally the front. Be sure to note that the front piece of edging is thinner than any of the others. The tray case can now be positioned on the stand (flush with the front, back, and sides) and secured through the shelf brackets.

How-To: ADD RUNNERS & EDGING

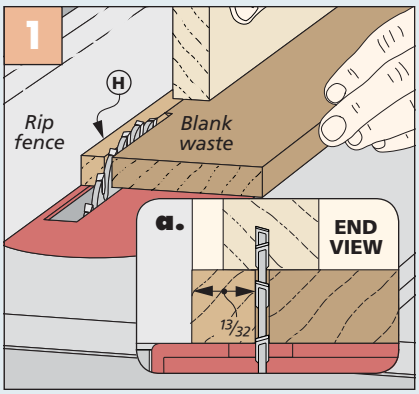

Runner Blanks. Start with an oversized blank before ripping the tray runners to final size.

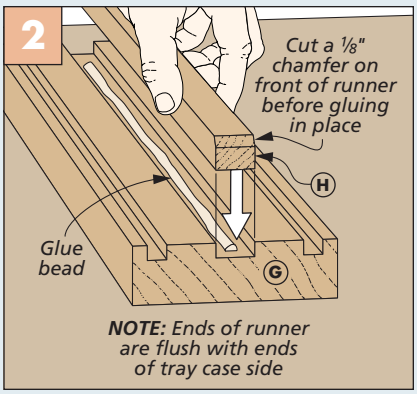

Side Assembly. After chamfering the front end of the runner, glue it in place in the center groove.

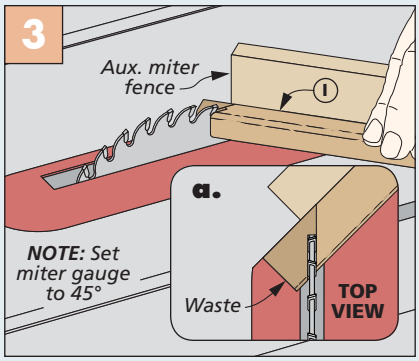

Miter Edging. With the table saw miter gauge rotated 45°, sneak up on the fit for the front edging.

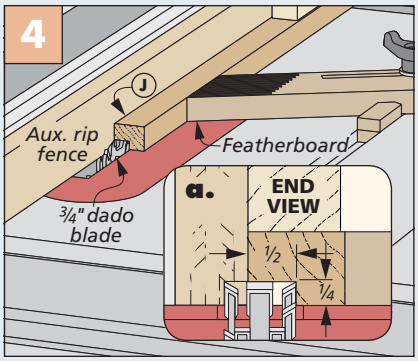

Rabbet Back Edging. The rabbet in the rear edging is quick to cut using a dado blade and featherboard.

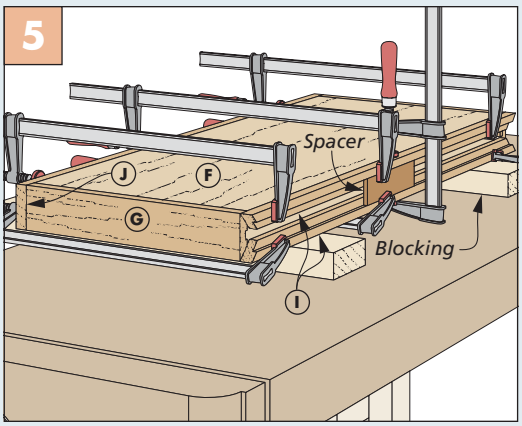

Attach Edging. Clamp the back edging in place on the rear of the case. A spacer keeps it properly positioned while tightening the clamps.

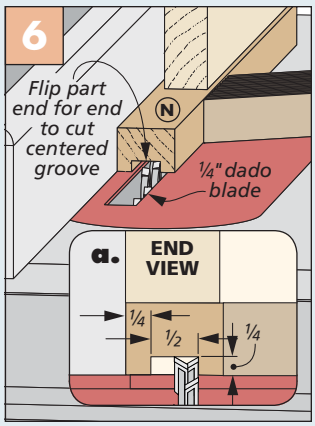

Tray Edging. The grooves on the tray side edging are made with a dado blade.

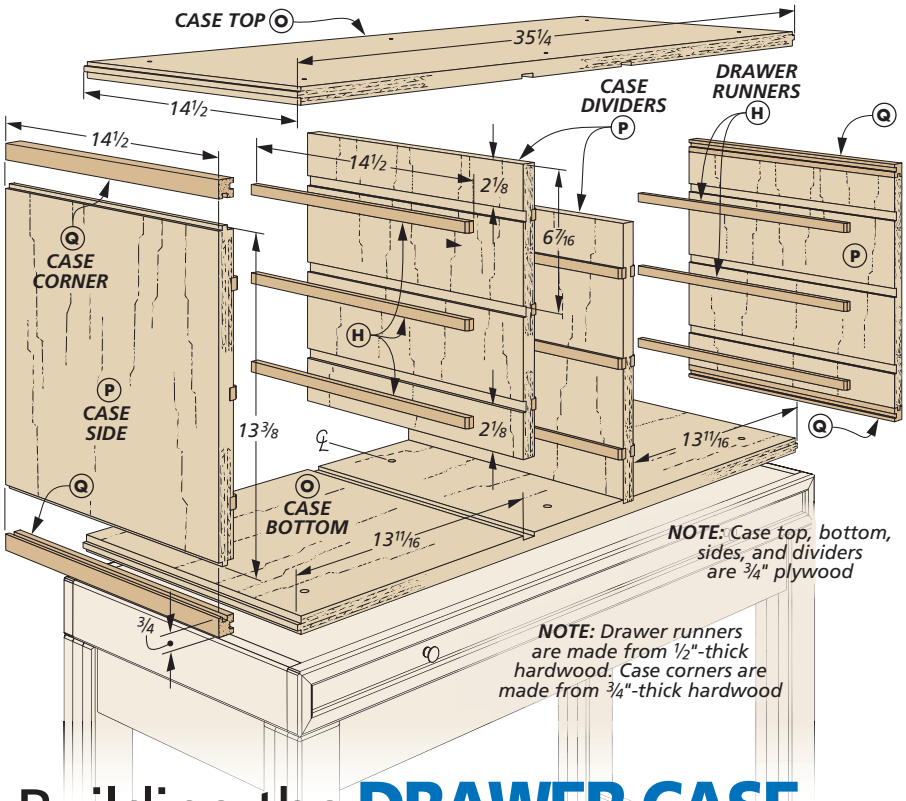

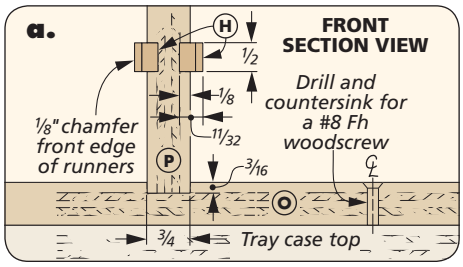

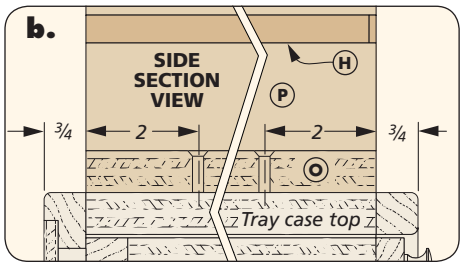

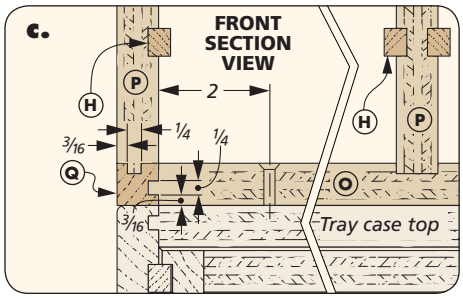

Building the DRAWER CASE

The upper portion of this cabinet is topped off with the drawer case. Its construction should look pretty familiar to you. It uses the same type of joinery as the tray case, with one subtle difference. The sides of the drawer case are plywood with hardwood corners.

CASE WORK. You'll begin by cutting the top, bottom, sides, and dividers to size from a sheet of plywood. Be sure the grain direction is oriented as shown above. The offset tongue formed on the ends of the top, bottom, and sides is accomplished the same way as the tray case — at the table saw (Figure 1).

The two dividers are sandwiched between the top and bottom in a couple of dadoes. Figure 2 below provides the details for this operation. Then it's just a matter of cutting all of the dadoes in the sides and dividers to hold the drawer runners, as shown in Figure 3.

MORE RUNNERS. The runners for the drawer case are the same size, and made the same way, as the runners for the tray case. You can refer back to page 47 for the information on making these.

How-To: CUT RABBETS & DADOES

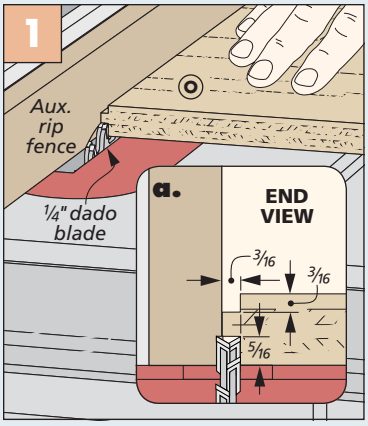

Rabbets. Use a dado blade to cut the rabbets on the panels that form the offset tongues.

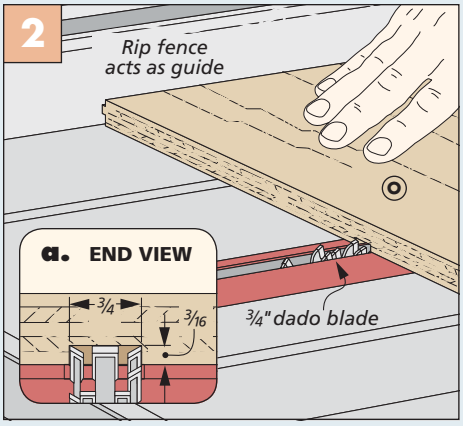

Panel Dadoes. The dadoes in the top and bottom can also be made at the table saw using the rip fence as a guide.

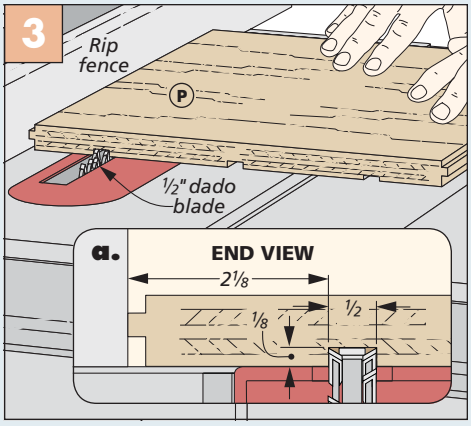

Sides & Dividers. Change the dado blade thickness and use the same technique to cut dadoes in the sides and dividers.

Then glue them in place in the sides and dividers, as shown in the main drawing on the previous page.

CASE CORNERS. The final pieces to make before assembling the drawer case are the four corners. These are simply square blanks with offset grooves in two sides to accommodate the offset tongues on the plywood panels. Figure 1 below provides the details for cutting these grooves.

STAGED ASSEMBLY. Instead of trying to glue and clamp all of the case parts at one time, I broke the assembly into a couple smaller stages. Start by gluing the corners to the case sides.

While the glue is drying on these parts, locate and drill the countersunk mounting holes in the case top and bottom. The position for these holes is shown in details 'b' and 'c' on the previous page. Now, glue the rest of the parts together to form the drawer case.

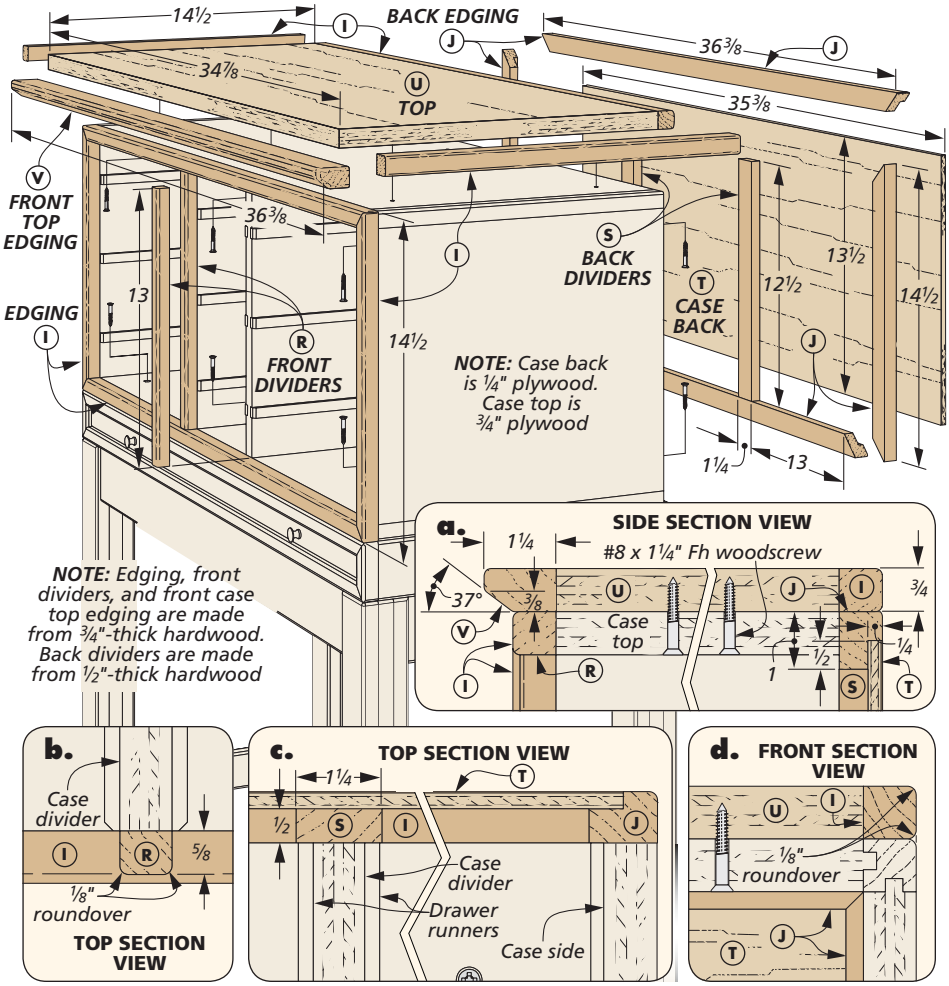

ADD THE BACK & TOP

The perimeter edging on the front and back of the drawer case is the same as the edging used on the tray case (detail 'a'). With that in mind, machine all of these pieces as before, miter the ends, and glue them to the case. I then took the time to round over the edges on the corners and the ends of the edging strips, the same as the tray case.

A few more pieces are needed to cover the plywood edges of the case dividers. For these I added two thinner strips on the exposed front and back edges. The pieces added to the back are slightly wider than the case dividers and pull double-duty as drawer stops (detail 'c'), while the strips on the front are thinner than the case edging, but have the same rounded-edges profile (detail 'b'). Once all of these pieces are glued in place, size the back to fit the rabbeted opening and glue it in place, as well.

CONSTRUCT THE TOP. The main drawing and details 'a' and 'd' above show all of the information you'll need to make the top and its necessary edging. The edging on the sides and back is the same as the edging you've used throughout this project on the tray and case front. The piece on the front edge, however, is slightly different.

It has a chamfer on its lower edge. I found it easiest to glue all of the edging to the top panel first, and then create the chamfer at the table saw, as shown in Figure 2 at left. The last step is to roundover all the edges. This includes easing the edge underneath the chamfer.

Now position the top on the case and mark the pilot hole locations on the underside of the top through the holes in the case top. After drilling the pilot holes, screw the top in place.

How-To: CUT GROOVES & CHAMFER TOP EDGE

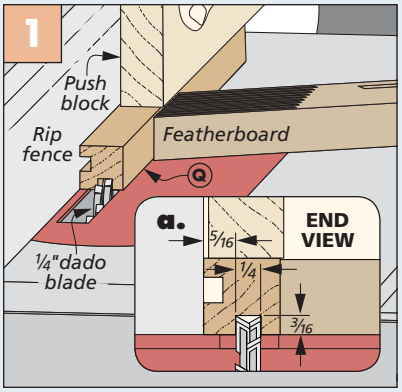

Case Corners. The offset grooves in the case corners are made using a dado blade in the table saw.

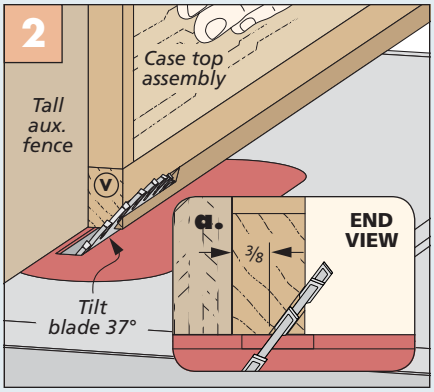

Chamfer Edging. Tilt the table saw blade 37° to make the chamfer cut on the front edging piece.

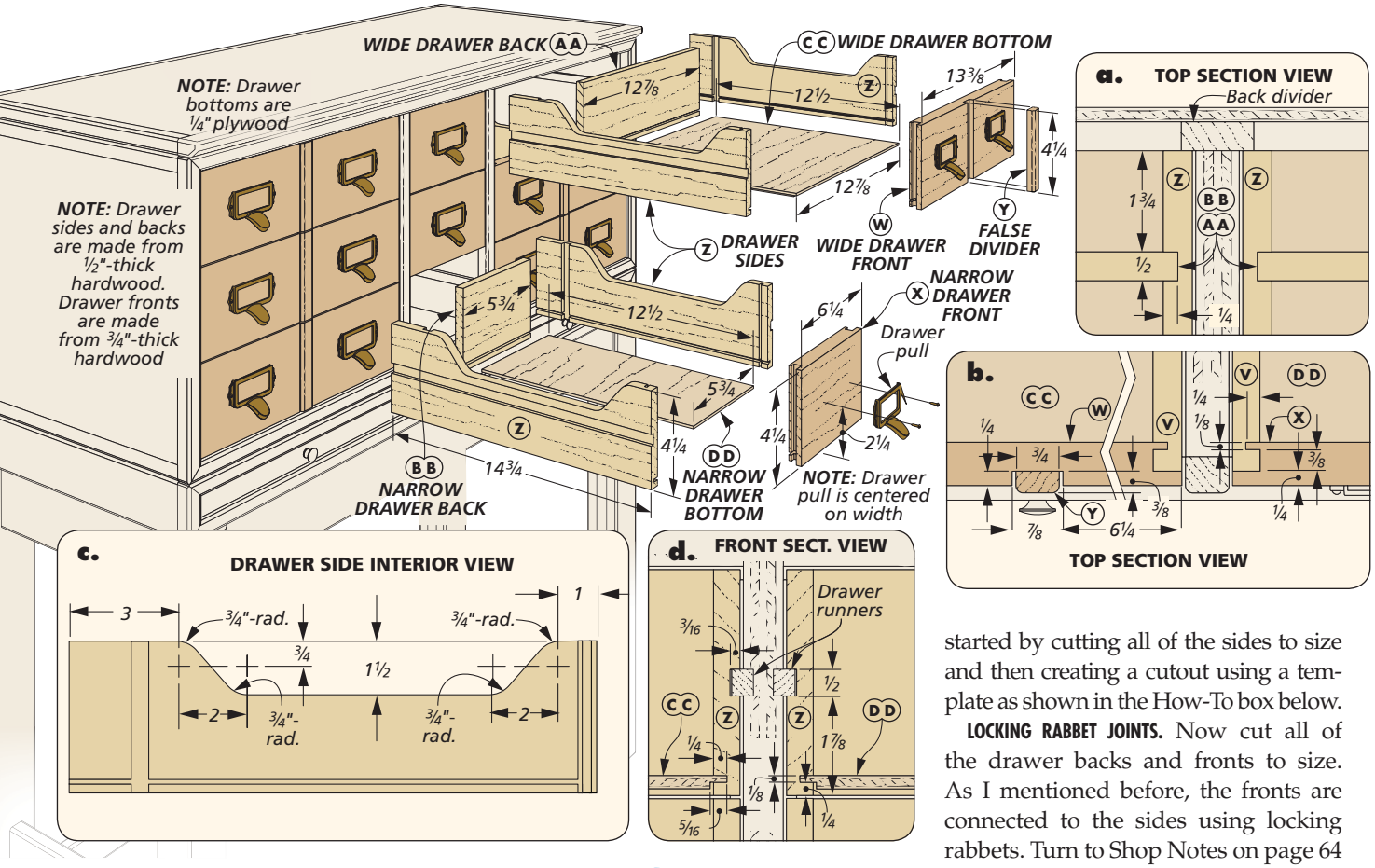

Adding the DRAWERS

The final stage of this project is to build the drawers. The two outside banks of drawers are twice as wide as the center drawers. But they have a false divider dropped into a dado in the front to give the appearance of two drawers. This allows you to store larger items while still maintaining the look of a card catalog.

SOLID CONSTRUCTION. Locking rabbets are used on all of the drawers to secure the fronts to the sides. A dado toward the back of each side piece captures the back, while a groove along the bottom edge secures the rabbeted plywood bottom.

SIDES FIRST. Despite the different drawer widths, they're all the same length. So I started by cutting all of the sides to size and then creating a cutout using a template as shown in the How-To box below.

LOCKING RABBET JOINTS. Now cut all of the drawer backs and fronts to size. As I mentioned before, the fronts are connected to the sides using locking rabbets. Turn to Shop Notes on page 64 to see how to make this joint.

After the locking rabbets are complete, you can finish the rest of the joinery on the sides, as shown in Figures 1 and 2 at the top of the next page. This includes the groove along the outside edge that allows the drawer to slide over the runner, as well as the dado near the back edge to secure the back.

With those complete, you still need to cut a dado in the center of the wide

How-To: MAKE THE DRAWER SIDE CUTOUT

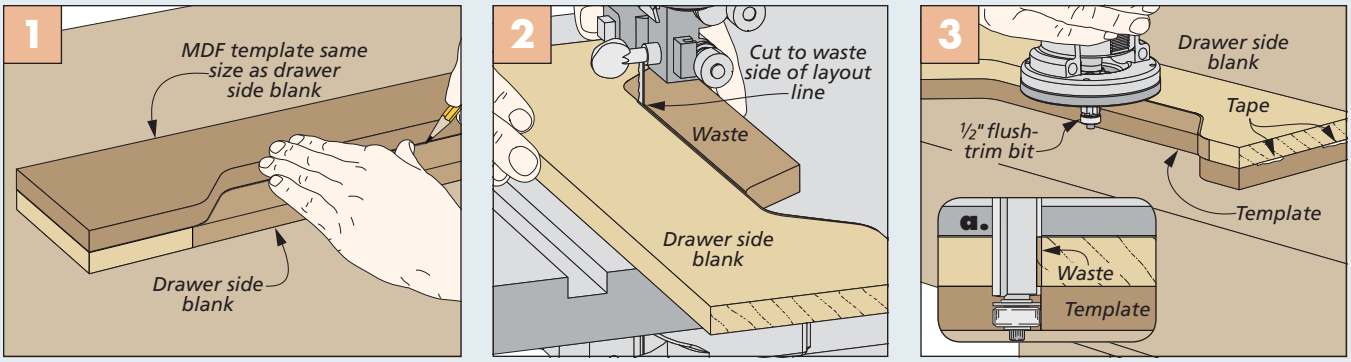

Trace Template. Line up the ends and edges of the template with a side blank and transfer the shape to the blank.

Rough It Out. Move to the band saw to rough cut the side blank. Stay to the waste side of the line.

Trim. Use double-sided tape to attach the template to the blank and clean up the waste with a flush-trim bit.

drawer fronts. Now, center the false dividers in the dado and glue them in place (detail 'b' on the previous page).

Finally, cut a 1/8"-wide groove along the inside, bottom edge on all of the drawer parts to hold the bottom. Cut the plywood bottoms to size and rabbet the edges (details 'c' and 'd' on the previous page) before assembling the drawers with glue and clamps.

The last detail is to pick out your finish and install the hardware. For information about the finish and hardware I chose, check out Sources on page 67. You'll then be ready to display your card catalog cabinet in a prominent place in your home. W

How-To: CUT DRAWER JOINERY

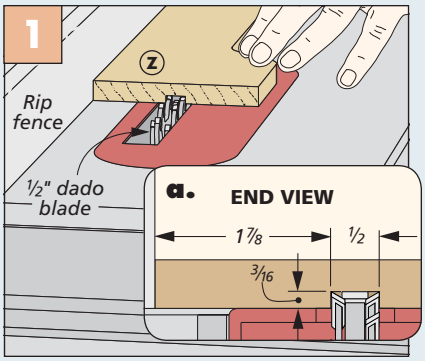

Cutting Grooves. Cut the groove along the outside face of the drawer sides using a dado blade.

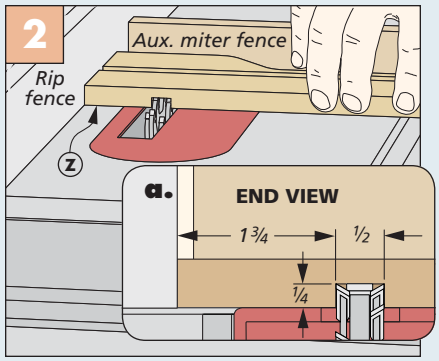

Dado for Back. The dado blade also makes quick work of cutting the dado to hold the drawer back.

Materials, Supplies & Cutting Diagram

A	Legs (4)	2 1/4 x 2 1/4 - 28
B	Upper End Rails (2)	3/4 x 3 - 14
C	Lower End Rails (2)	3/4 x 2 - 14
D	Front/Back Rails (2)	3/4 x 3 - 34 3/8
E	Stretcher (1)	3/4 x 1 3/4 - 34 5/8
F	Tray Case Top/Bot. (2)	3/4 ply. - 14 1/2 x 35 1/4
G	Tray Case Sides (2)	3/4 x 2 5/8 - 14 1/2
H	Runners (20)	1/2 x 13/32 - 14 1/2
I	Edging	3/4 x 3/4 - 170 rgh.
J	Back Case Edging	3/4 x 1 - 100 rgh.
K	Tray Case Back (1)	1/4 ply. - 15 5/8 x 35 3/8
L	Tray (1)	3/4 ply. - 13 3/4 x 33 1/4
M	Front Tray Edging (1)	1/2 x 1 - 34 3/4
N	Back/Side Tray Edging	3/4 x 1 - 65 rgh.
O	Case Top/Bottom (2)	3/4 ply. - 14 1/2 x 35 1/4
P	Case Sides/Dvdrs. (4)	3/4 ply. - 14 1/2 x 13 3/8
Q	Case Corners (4)	3/4 x 3/4 - 14 1/2
R	Front Dividers (2)	5/8 x 3/4 - 13
S	Back Dividers (2)	1/2 x 1 1/4 - 12 1/2
T	Case Back (1)	1/4 ply. - 13 1/2 x 35 3/8
U	Top (1)	3/4 ply. - 14 1/2 x 34 7/8
V	Front Top Edging (1)	3/4 x 1 1/4 - 36 3/8
W	Wide Drawer Front (6)	3/4 x 4 1/4 - 13 3/8
X	Narrow Drawer Front (3)	3/4 x 4 1/4 - 6 1/4
Y	False Dividers (6)	3/8 x 3/4 - 4 1/4
Z	Drawer Sides (18)	1/2 x 4 1/4 - 14 3/4
AA	Wide Drawer Backs (6)	1/2 x 4 1/4 - 12 7/8
BB	Narrow Drawer Backs (3)	1/2 x 4 1/4 - 5 3/4
CC	Wide Dwr. Btm. (6)	1/4 ply. - 12 1/2 x 12 7/8
DD	Narrow Dwr. Btm. (3)	1/4 ply. - 12 1/2 x 5 3/4

- (4) Shelf Brackets
- (8) #8 x 3/4" Fh Woodscrews
- (2) 17mm-dia. Tray Knobs
- (15) Label Holder Pulls w/Screws
- (12) #8 x 1 1/4" Fh Woodscrews

1/2" x 4" - 84" Red Oak (2.3 Sq. Ft.)

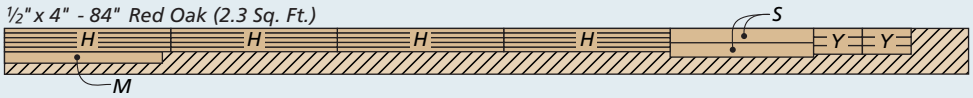

***NOTE:** Parts 'Y' planed to 3/8" thick*

1/2" x 5" - 96" Hard Maple (Two Boards @ 3.3 Sq Ft. Each)

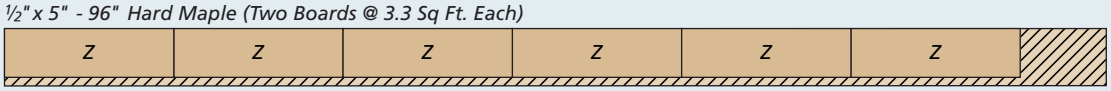

1/2" x 5" - 96" Hard Maple (Two Boards @ 3.3 Sq Ft. Each)

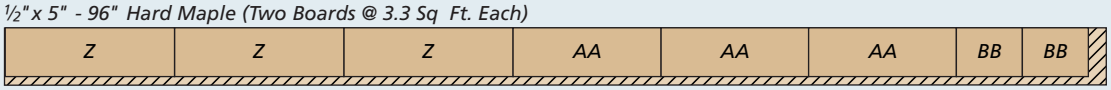

3/4" x 5" - 96" Red Oak (Two Boards @ 3.3 Bd. Ft. Each)

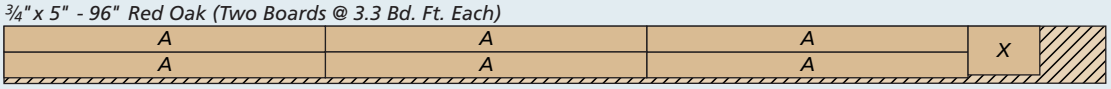

3/4" x 7" - 96" Red Oak (Two Boards @ 4.7 Bd. Ft.

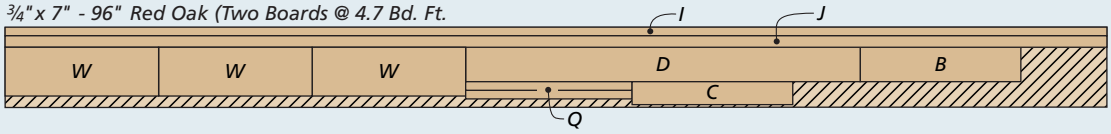

3/4" x 6" - 96" Red Oak (4.0 Bd. Ft.)

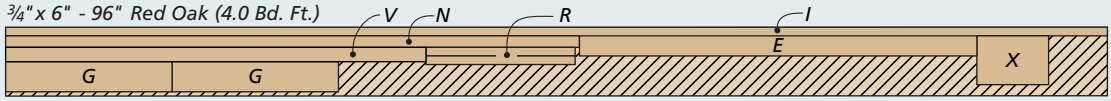

***ALSO NEEDED:** One 48" x 48" sheet of 1/4" oak plywood*
One 48" x 96" sheet of 3/4" oak plywood

***NOTE:** Parts 'R' planed to 5/8" thick*

a fresh look at

Pocket Hole Joinery

Whether I'm building face frames or cabinets, I rely on pocket hole joinery quite a bit. And with good reason: Few joinery solutions offer the combination of strength and simplicity that comes from drilling an angled hole with a jig and then driving in a screw to connect the two parts. In fact, I would say among the various methods that I employ to join pieces of wood together, it's probably the easiest of all to accomplish.

OVERVIEW OF A POCKET HOLE JOINT

To create a pocket hole joint, you simply drill an angled hole in one workpiece, and then butt and clamp the mating piece to it. As you drive in the pocket screw, it draws the two pieces together to create a solid, strong joint (drawing below).

POCKET SCREWS. As for the screws used in pocket hole joinery, they're not your average woodscrews. Most have a washerhead that pulls the joint together by seating fully in the pocket hole.

▲ Pocket screws come in many lengths for different material thickness, as well as fine threads for harder woods and coarse threads for softer woods.

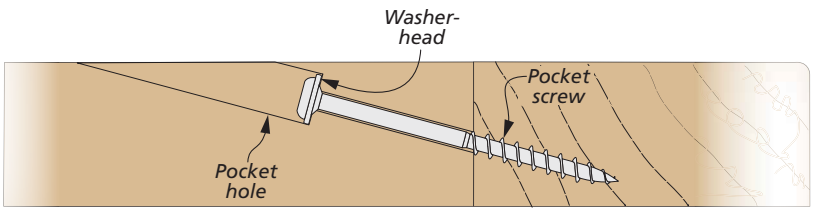

Basic Joint. The screw driven into the angled hole forms a strong mechanical connection between the two boards, while the washerhead on the screw helps to lock the joint firmly together.

(Although some smaller pocket screws have a panhead that accomplishes the same goal.) Determining the correct length of screw to use depends upon the thickness of your workpieces. There are also coarse-thread screws for softer woods and finer threads for harder woods, as well as coated screws for exterior use (lower photo, previous page).

USES FOR POCKET HOLE JOINTS

If there's any drawback to pocket hole joinery, it's that it leaves visible holes in your workpieces. One option is to plug the holes, which I'll explore in greater detail on page 55. But what I often do is use pocket hole joinery on areas of the project where the holes will be hidden.

You'll find that there are a lot of possibilities where this will be a good option. A few applications are shown in the drawings at right. For example, it's great for cabinet face frames, where you can hide the pocket holes on the back face of the frame. It also works well for picture frames, cabinets, cabinet base frames, table aprons, or adding cleats to projects.

TYPES OF POCKET HOLE JIGS

A number of manufacturers make pocket hole jigs, including *Craftsman*, *Porter-Cable*, *General Tools*, and others. But I've always gravitated toward *Kreg*'s offerings due to their ease of use and the many types available. Their products are easy to find at many home centers.

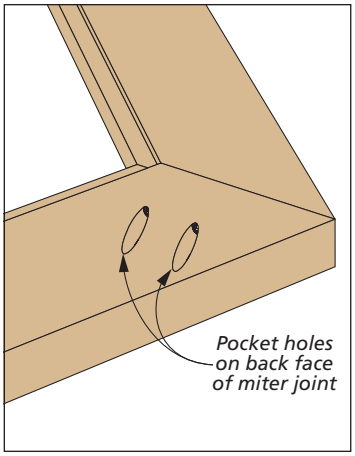

Miters. Miter joints can be tricky to glue up without parts slipping, but pocket holes can help.

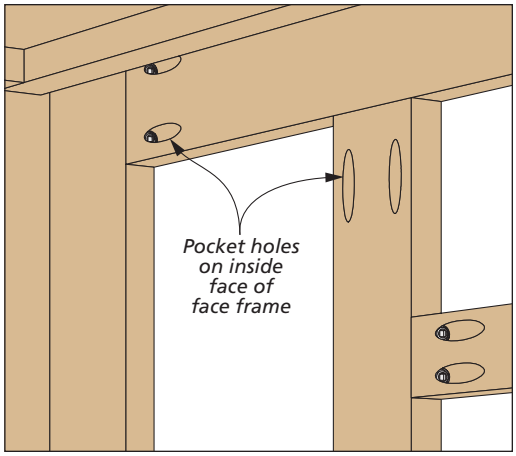

Face Frames. Since the backside of a face frame is usually hidden from view, it's a perfect situation for using pocket hole joinery.

If you work primarily on smaller parts, then a stationary jig that you clamp to a benchtop is a good choice. With this type of jig, you bring the workpiece to the jig to drill the pocket holes (main photo, previous page).

For larger projects with long or wide parts, a mobile jig is a good solution (refer to the left photo below). With this style, you bring the jig to the workpiece in order to complete the task.

Finally, if you drill a lot of pocket holes, you might want to look into a pocket hole machine to speed up your work. *Kreg* makes one solution, the *Foreman*, that is built and priced for consumers (below right). Refer to page 67 for source information on these tools.

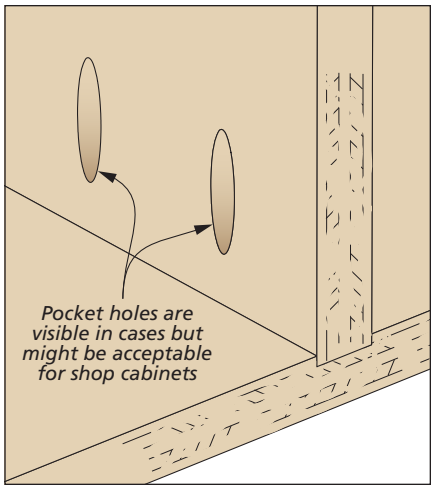

Case Joinery. Pocket holes aren't ideal for all casework, but they can speed up jobs like making basic shop cabinets.

Pocket Hole Options: JIGS & MACHINES

▲ A portable pocket hole jig like this *Kreg Jig HD* is a great solution if you're working with big parts where you want to bring the jig to the workpiece rather than the other way around.

▲ The *Kreg Foreman* is a consumer-priced pocket hole machine that drills a hole as you lower the machine's handle. It can greatly pick up the pace of your work if you drill a lot of pocket holes for your projects.

Pocket Hole Tips & Tricks

When building frames, you'll drill pocket holes on the ends of boards (rather than edges), parallel with the grain direction. The main considerations are setting the jig to match the material thickness and positioning the holes along the width of the board. As discussed earlier, you also choose the screws to join the parts based on the material thickness.

SETTING THE JIG. When it comes to setting the jig to match stock thickness, the process is fairly simple. The goal is for the exit hole to be roughly centered on the thickness. To that end, the drill bit guide slides up and down in the jig base and has a number of settings for common stock thicknesses like ½", ¾", 1", and so on. You simply slide the bit guide until it matches the setting you need and lock it in place. You'll also need to adjust the stop collar on the drill bit to match the stock thickness, as shown in the drawings at the upper right.

As far as spacing out the holes goes, you should keep them at least a ½" from the edge of the workpiece to avoid blowout. And you'll want to aim for at least two holes. For wider pieces, adding holes in the middle increases the strength of the joint (drawing at right).

CLAMPING CONSIDERATIONS

Before driving in the pocket screws to complete your pocket hole joints, you'll also need to clamp the parts securely to one another to prevent them from moving apart as you drive in the screws. If the project is small enough (or your clamps are long enough), you can simply clamp across the assembly to hold everything together, as shown with the small frame in the lower left drawing.

Another option is to use face clamps. These apply pressure directly at the joint, so you can hold it together no matter how big or small the assembly is, as shown in the lower middle drawing.

A simple assembly table that consists of a piece of plywood with a couple of fences at 90° to one another is another option. It will hold the parts

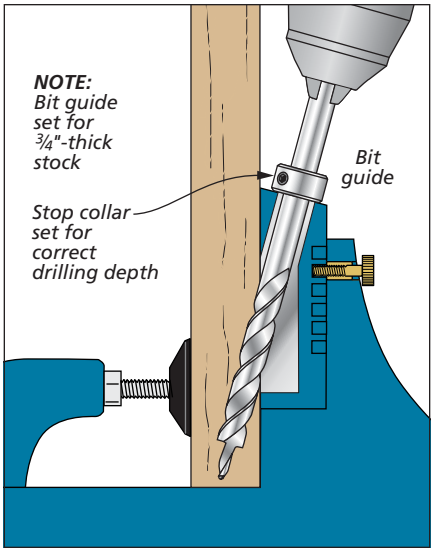

Jig Setup for ¾"-Thick Stock. For thinner stock, you'll set the bit guide and stop collar at a lower setting.

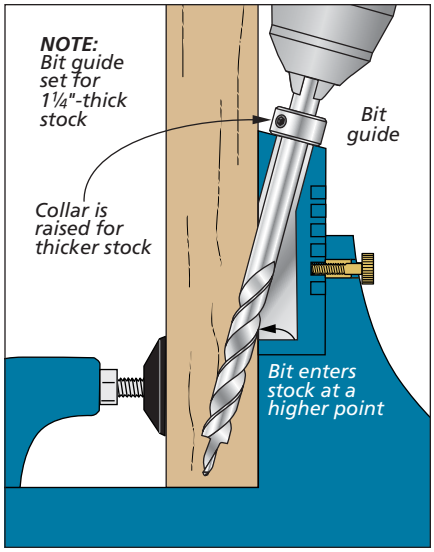

Jig Setup for 1¼"-Thick Stock. To drill pocket holes in thicker stock, simply raise the bit guide and stop collar.

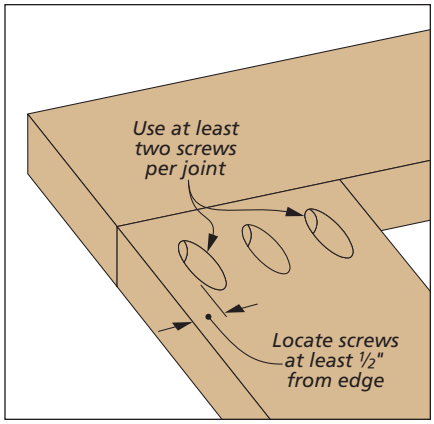

Hole Position. You'll want pocket holes at least ½" from edges to prevent blowout. More holes add strength.

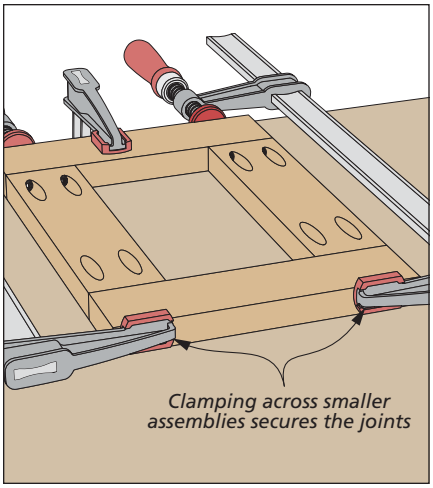

Clamp Across. For small assemblies, simply clamping across them provides enough support when driving screws.

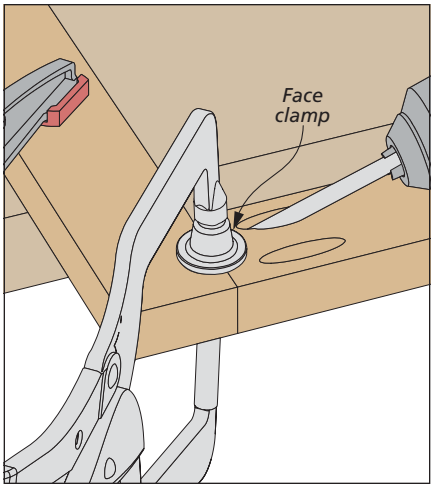

Face Clamps. A face clamp applied directly to the joint will also hold it well when adding the pocket screws.

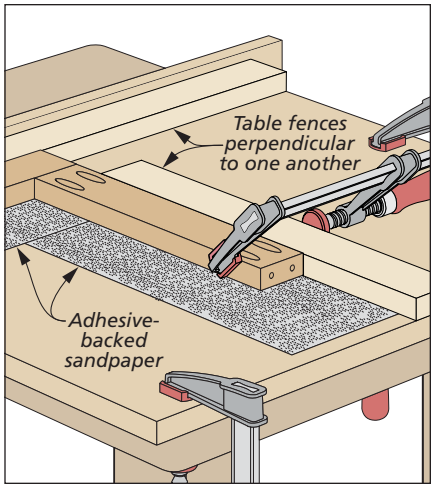

Assembly Table. A simple table with 90° fences provides clamping surfaces and keeps parts square for assembly.

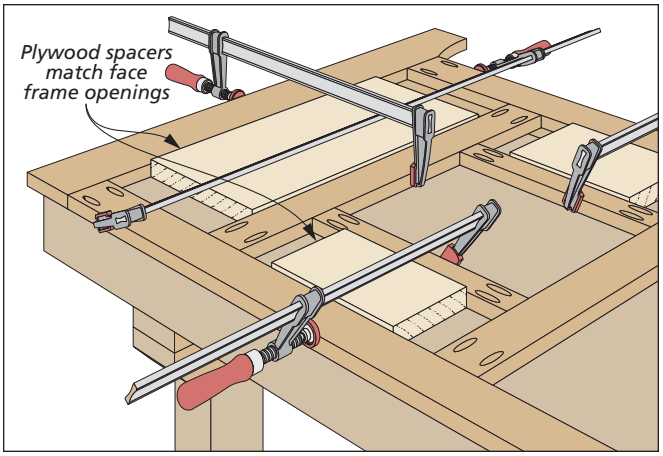

Spacers. For face frames, some simple plywood spacers that match the widths of the openings will keep everything positioned correctly as you drive in pocket screws.

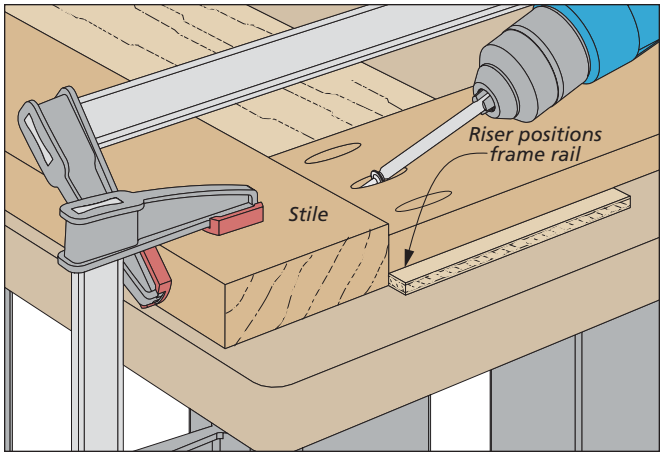

Risers. When joining parts that have offset faces, you can use a riser block with a thickness that matches the offset between the parts to keep them all aligned.

square to one another and give you a clamping surface as you secure the joint. As you can see in the lower right drawing on the previous page, I like to put down a few pieces of adhesive-backed sandpaper on the base of the table to provide grip and keep the pieces from sliding around as I secure the joints with pocket screws.

ALIGNMENT ISSUES

One concern that often arises with pocket hole joinery, particularly with project assemblies such as face frames, is that it can be difficult to align the parts properly prior to driving in the screws. Unlike other types of woodworking joinery like mortise and tenon joints or dadoes, the project parts with the pocket holes don't have an automatic place to register against the mating parts before you put them all together. Fortunately, there are some simple solutions you can employ as you join your assemblies to make everything go together smoothly.

When assembling face frames, for example, I like to cut plywood spacers to match the widths of the openings. Then I can use the spacers to square everything up while driving in the screws (upper left drawing).

Another issue where positioning the parts can come up is when the edges or faces are offset. Here again, using a wood riser to position the mating parts properly can do the trick, as shown in the upper right drawing.

PLUGGING POCKET HOLES

If you want to use pocket hole joinery on a visible area of your project, then plugging the holes is an option. You can buy pocket hole plugs, but they're made from dowels and leave the end grain exposed on the surface. As a result of this, I typically reserve these plugs for projects that I plan to paint.

Another option is the *Custom Pocket Hole Plug Cutter* kit from *Kreg* shown below. The kit comes with a bit guide that fits in a *Kreg* pocket hole jig. It has a special bit that allows you to cut plugs to match the wood and the grain of your project parts. After making as many plugs as you need, you can cut them free from the blank at the band saw. At this point, the plugs are ready to use on your project.

POCKET HOLE POSSIBILITIES. If you don't already use a lot of pocket hole joinery in your woodworking, then the method is certainly worth a closer look. By employing it in the right situations, you can simplify the construction of your projects in a manner that completely hides the holes from view. W

▲ The *Kreg* plug cutter kit comes with a special bit guide and the plug cutting drill bit.

▲ You make plugs with the guide and bit, much like drilling standard pocket holes.

▲ Making a simple cut at the band saw releases all of the plugs from the blank.

▲ Each plug sits just above the project surface, so you can sand it smooth and flush.

avoid these 5 Drill Press Mistakes

A drill press is a versatile addition to any shop. I use mine on nearly every project. Part of what makes it so handy is how simple of a machine it is. However, that simplicity can lead to a casual attitude — just walk over to the drill press, turn it on and get started. That mindset often leads to less than desirable results. Here are five common problems you may run into. Thankfully, the remedies for poor-quality performance are simple to achieve, and they won't cost you a dime.

RAGGED OR BURNED HOLES

It's tempting to have a "set it and forget it" attitude with the speed of your drill press. Most of the time, I see drill presses set to a medium to low speed (less than 1,000 rpm). The idea here is that low speeds are low-risk. But this approach ignores the fact that a drill bit has an optimum speed range based on its type and its diameter. When set too low or too high, the quality of the hole suffers.

One good example is brad point bits. These bits are designed to work their best at higher speeds (above 1,500 rpm). At slow speeds, the spurs on the edge of the bit may tear out soft or open-grained wood like red oak.

The remedy is to match the speed of the drill press to suit both the bit and the material (photo at left). You may be thinking that the time it takes to change the speed in order to drill a few holes doesn't seem worthwhile. The truth is it really

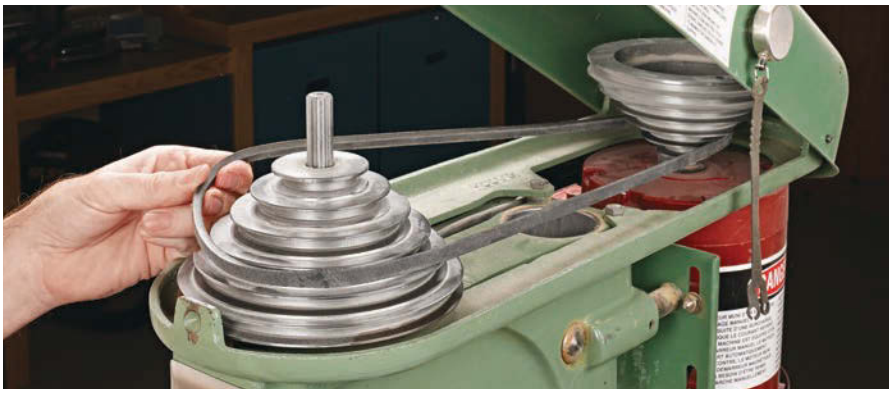

◄ Adjust the belt on the drill press pulleys to change the speed to match the bit you plan to use.

doesn't take that long. Many newer drill presses have wheels or levers to simplify the process of changing speeds.

Two approaches come into play in order to determine the proper drill press speed. First, you can find speed charts from many bit manufacturers as well as online sources. These provide a good starting point. From there, I rely on test cuts and experience. That may sound subjective, but in a short time, you get an idea of what it takes to make clean cuts.

INCONSISTENT PLACEMENT

When it comes to lining up the bit with a layout mark, eyeballing the operation leaves you with minor variations in the placement of holes. For some tasks, that may not be a big deal. But for others, it may lead to difficulties down the road.

The solution is to give yourself a hand by adding a fence to the drill press table, as shown in the main photo on the previous page. I try to do this anytime a hole needs to be dead-on. Whether it's one hole or a dozen, by setting the fence you can rest assured knowing the holes are a consistent distance from an edge.

Another way to improve accuracy is to add a stop block to the fence. Now you're registering the parts off both an edge and an end to maximize your chances of drilling a hole in the right place.

By clamping a block to the fence above a workpiece, you can prevent a thin workpiece from climbing the bit.

TOO DEEP, OR NOT DEEP ENOUGH

Along with lining up a hole by eye, drilling a hole to the proper depth is another place where it's tempting to just wing it. However, most drill presses have a depth stop that's designed to increase accuracy, save time, and improve the quality of the holes you drill, as shown in the photo at right.

When drilling pilot holes, counterbores, or recesses for hardware, taking the time to set the depth stop really pays off. If you drill a hole that's too shallow, it's difficult to align the bit perfectly without enlarging the hole or tearing the top edge of the hole.

I often mark a line on the edge or end of a workpiece that indicates the depth of the hole. This serves as a guide for setting the depth stop.

For a through hole, you may not think setting the depth stop is necessary — or even helpful. However, drilling too deep needlessly chews up the drill press table (or insert). That results in tearout on the backside of the workpiece.

WORKPIECE SHIFTS OR LIFTS

Drilling thin stock or small pieces presents a challenge in control. With thin parts, the upward cutting action of the bit can cause a workpiece to climb the bit and lift off the table. This leaves an oblong hole, and the spinning part presents a hazard. The rotational force may wrench a small part out of your hand.

The answer to both issues is to use a hold-down. Something as basic as a block that's clamped to the fence above the workpiece works well, as you see in the lower left photo. Working together with the fence, the hold-down immobilizes the workpiece for cleaner holes.

Replace the insert regularly to ensure adequate workpiece support for drilling tearout-free holes every time.

All it takes is a few seconds to set the depth stop on the drill press to create consistent, accurate holes.

GOOD ON TOP, LOUSY UNDERNEATH

As I said earlier, using the correct bit speed is a surefire way to create a crisp start to the hole. But for through holes, you need to finish strong, as well. As the bit exits the workpiece, the bottom face tears out if it isn't supported.

The auxiliary table for my drill press has a replaceable insert that backs up the workpiece to stop tearout in its tracks. Over time, the insert gets chewed up. So you need to flip it over or replace it to gain the most benefits (near left photo).

You can get the same support even if you don't have a table like this. Small squares of MDF work great as sacrificial "cutting boards." No matter which method you use, be sure the surface is free of debris that would interfere with providing close support.

On their own, each of the setup solutions here will help you improve the results you can expect from your drill press. But when you combine them, you'll really notice a big improvement in the quality of the projects you make. W

our favorite Cordless Tools

▲ One of the main benefits of using a cordless brad nailer is that you can free yourself from the jarring sound of an air compressor kicking on every few minutes.

There's no question that cordless tools have come a long way since they first appeared on the scene. Today's cordless technology offers tools that are more powerful, run longer, and weigh less than those made just a few years ago. Improvements in battery technology have even made tools like cordless table saws and miter saws possible.

This is great news if you're a contractor or builder working on a jobsite where electrical power isn't always available or conveniently located. But do cordless tools offer any advantages to a home woodworker? Well, if you've ever used a cordless drill, you probably would say, "Yes." However, drills aren't the only battery-powered tools that are handy to have in a home shop. Here's a quick look at five cordless tools that we feel are worth considering — even if you already own a corded version.

CIRCULAR SAW. There's a tendency to think of a circular saw as a construction tool useful for crosscutting "two-by" framing lumber. But in my shop, I often use a circular saw to break down sheets of plywood or MDF before cutting them to final size on my table saw. The issue I have with a corded circular saw is that the cord drags along behind the tool and can snag on the edge of the sheet, resulting in an uneven cut.

A cordless circular saw (photo above) does away with that distraction. In addition, most cordless saws are smaller in size, making them a little easier to handle. Since I rarely use my circular saw for cutting anything thicker than ¾", the smaller size is actually a benefit. And because I typically use my circular saw for just a few cuts at a time, I find that a cordless version gives me all the power I need for just about any project.

BRAD NAILER. When it comes to installing molding, edging, or glass stop on a project, it's hard to beat the convenience of a brad nailer (lower left photo on previous page). But that convenience typically comes at a price. With an air-powered brad nailer, you also need an air compressor to run it. And then you have the hassle of dragging an air hose around the shop in order to use it. Cordless brad nailers, on the other hand, don't have these issues.

If you've tried cordless brad nailers in the past and were unimpressed, you may want to give them a second look. Some of the older cordless nailers were a little slow in action because they utilized a motor-driven piston that took a second to ramp up before each fire. But the technology behind some of the newer models has improved, offering nailers that will fire brads nearly as fast as their air-powered cousins.

JIG SAW. Like the circular saw, the jig saw is a tool that doesn't typically see a lot of use in my shop. But for cutting out openings in the middle of a panel, as shown in the photo above, or cutting interior curves and unusual shapes, it's a handy tool to have.

Because I'm usually guiding the jig saw freehand, I find it a lot easier to steer the tool along my layout line when it isn't tethered to a power cord. And since I'm usually making just one or two cuts with my jig saw at a time, it's a lot easier to grab my cordless jig saw and get cutting than to drag out an extension cord.

A cordless jig saw allows you to cut out an opening in the middle of a plywood panel without having to use one hand to hold the cord out of the way. And with the 18-volt versions available today, you won't have to sacrifice anything in the way of power.

IMPACT DRIVER. If you already own a cordless drill, you may question the need for an impact driver. After all, a cordless drill can be used to drive screws, as well as drill holes. But unlike a drill, an impact driver is designed to do just one thing — drive fasteners. And it does this exceedingly well (lower left photo).

An impact driver works by not just spinning the fastener, but by hitting it with concussive blows, as well. The increased torque from this one-two punch allows the tool to power through driving even large lag screws. And it can drive screws through softwoods without the need for drilling pilot holes.

The chucks found on most impact drivers are designed to accept only hex-shank bits. But there are accessory drill chucks and adapters available to expand the versatility of this tool.

MULTI-TOOL. I'll be the first one to admit that an oscillating multi-tool is probably not a "must-have" tool for most woodworkers. But it's one of those tools that you'll find yourself reaching for more and more once you own one.

Multi-tools are great for reaching into tight spaces where other sanders simply cannot go, as you can see in the photo in the lower right. And there are a variety of attachments available that allow you to use them for other tasks around the house, as well.

I don't see cordless tools completely replacing all the corded power tools in my shop any time soon. But in some cases, a cordless tool really is the best choice for the job at hand. W

Impact drivers are generally lighter and smaller in size than cordless drills. But they provide more torque, making them a great choice when you have a lot of screws to drive.

It's hard to beat the versatility of an oscillating multi-tool. They can be used for sanding, cutting, scraping, and even removing tile grout. With a cordless version, you can use it anywhere.

the basics of

Brushing an Oil-Based Finish

Here in the *Woodsmith* shop, the shop craftsman finishes almost all of our projects by spraying on a couple of protective coats of lacquer. However, in a home shop, setting up a dedicated spray booth for applying lacquer might not be a realistic option. And that typically makes brushing on a varnish, most commonly polyurethane, your best bet for a protective coating for your project.

Both oil-based and water-based polyurethanes are available, and either one will offer protection to your woodworking project. But if you want the warm, amber tone that you typically expect to see on an heirloom piece, then an oil-based finish is the way to go.

When it comes to brushing on an oil-based finish smoothly, there is certainly an art to it. By taking the right approach, from the brush you choose to the sequence you use to apply the finish, you can achieve a smooth, flawless, and drip-free surface. Here's what to keep in mind as you get started.

CHOOSING YOUR TOOL. The first step in getting good results is pairing the proper brush with the finish you plan to use. For oil-based varnish or polyurethane, a white China bristle brush is your best bet (photo, below left). These brushes have soft bristles that are perfect for smoothly applying an oil-based finish. Plus, they hold a large amount of finish and release it evenly on the surface.

GETTING STARTED. Once you have the right brush in hand, loading it properly is step number one for getting good results. I typically dip just the

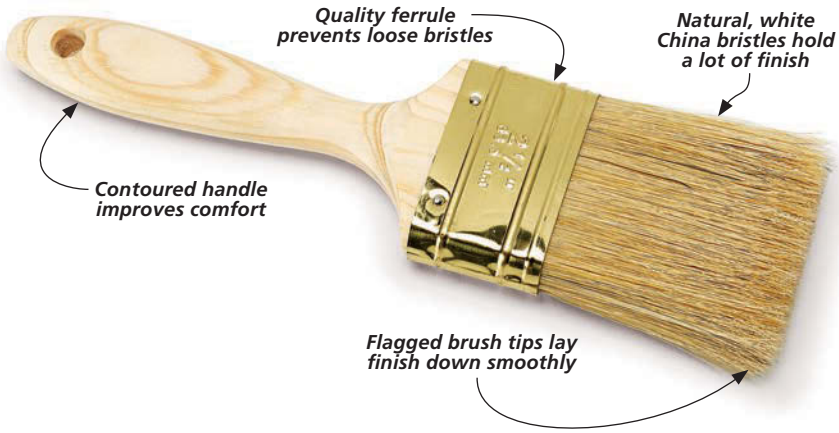

▲ Pouring finish in a jar prevents contamination in the can and makes it easier to remove excess finish from the brush.

By starting slightly off the edge of a panel and back-brushing carefully toward it, you can avoid runs and drips.

Now move back to the starting point, and make a smooth, sweeping stroke with the grain across the panel.

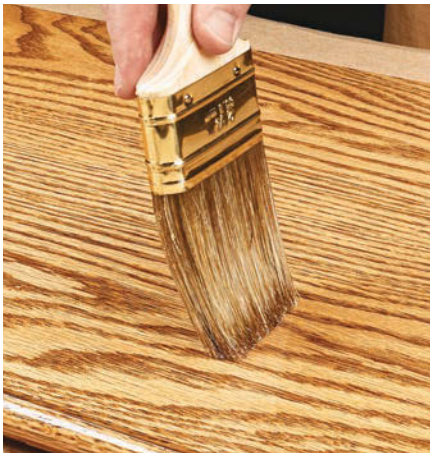

After finishing the entire panel, hold the brush almost vertically in order to "tip off" the surface and make it smooth.

first couple of inches into the finish and then dab off the excess on the side of the container. To make this easier, I transfer some finish from the can into a glass jar (lower right photo, previous page). This way, I can see more clearly exactly how much finish I am loading onto my brush. Plus, it's a lot easier to wipe off the excess cleanly on the inside surface of a jar than on the lip of a full can of finish.

BRUSHING FLAT SURFACES. Probably the most common area you'll need to finish on your woodworking projects is a flat surface. To prevent runs and drips from spilling over the surface of the panel and onto the edges, I like to start slightly off the edge and back-brush toward it (left photo above). Then I brush with the grain across the panel, holding the brush at 45° and making slightly overlapping strokes (upper middle photo).

For the smoothest finish possible, there's one extra step you'll want to add to your brushing process, and that's to "tip off" the finished surface to make it completely smooth. As you can see in the upper right photo, you'll hold the brush almost completely vertical for this step.

VERTICAL SURFACES. If you have to brush finish on a vertical surface, gravity presents an additional challenge to your progress. Obviously, these areas are a lot more prone to runs and drips than horizontal ones. To avoid these issues, one useful technique to try is called cross-brushing. Basically, what you do is brush horizontally against the grain, working your way from the bottom of the vertical surface to the top, as shown in the lower left photo.

Then, once the finish is applied, you "tip off" the entire surface by starting at the bottom and working toward the top vertically (lower right photo). This smooths everything out and prevents any runs and drips from occurring.

BRUSHING TIPS & TRICKS. Whichever type of surface you're finishing, there are a few other things I keep in mind to improve my results. In general, I like to apply finish in several light coats, rather than a heavy coat, to get the smoothest, most even results without runs or drips. To that end, even though the directions on most cans of finish recommend two coats, I like to use three or more.

In addition, I sand lightly between coats with 320-grit paper. Then I thoroughly wipe off any dust before applying subsequent coats.

SMOOTH WITH A BRUSH. A flawless, glass-smooth finish is truly possible by taking your time and employing the proper brushing techniques. Ater a little bit of practice, you might find that your results may rival those of a sprayed-on finish. W

An approach that works well for vertical surfaces is called cross-brushing. First, you brush back and forth across the grain, working from the bottom up (left photo). Now complete the coat by "tipping off" the surface vertically from the bottom to the top (right photo).

strategies for Cutting Sheet Goods

Here in the *Woodsmith* shop, we have a panel saw for cutting sheet goods. This handy, wall-mounted tool makes positioning and breaking down large panels a snap. But like most people, I don't have that luxury when I'm working in my home shop. So I do what many people do and figure out how to break down those large sheets at the table saw. These cuts can be challenging. But with the right setup and technique (and a little help), you'll have that panel of plywood or MDF broken down into more manageable pieces in no time.

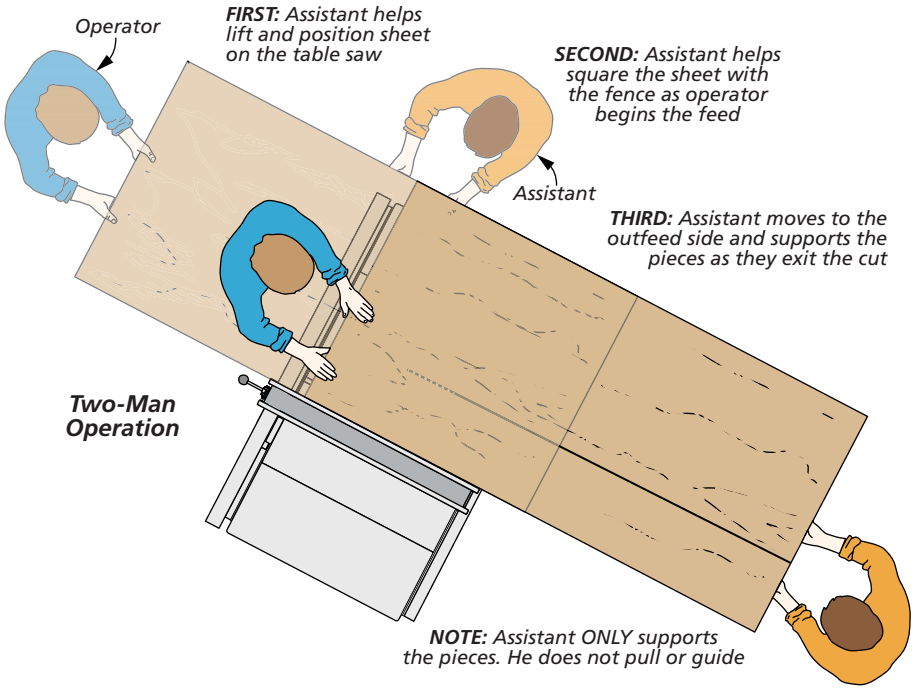

CLEAR SOME SPACE. As you can imagine, one of the first considerations when cutting full sheets at the table saw is making sure you have enough space. In order to rip a full sheet of plywood, you'll need a full 96" both in front of and behind the saw. For crosscuts, it requires 48" of clearance in front and behind the saw, as well as some space along the side.

In my garage shop, I have my table saw on a mobile base. This allows me to move it out to the driveway if I need to break down sheet goods.

TWO-MAN TECHNIQUE

The reality of breaking down full sheets is that it's easier to do it with two people. So if a friend is available to help out, I often opt for that method. The drawing on the left provides the basic overview of the

two-man technique. Both the table saw operator and the assistant should start at the front of the table saw, with the operator behind the sheet and the assistant beside it. This way, the two people can work together to lift the sheet onto the saw table, with the leading end positioned in front of the blade.

At that point, the assistant can switch on the saw. Then he will hold the edge of the panel as the operator begins to push it through, keeping it square with the blade and tracking along the rip fence.

As the leading end of the panel starts to exit the saw table, the assistant moves to the back of the saw and supports the two pieces as the operator continues to push. The key is for the assistant to simply hold up the pieces and move steadily backward. He should avoid pulling on the pieces, as this can cause them to shift. When the cut is done, the operator shuts off the saw, and both people can safely move the cut panels to a worksurface.

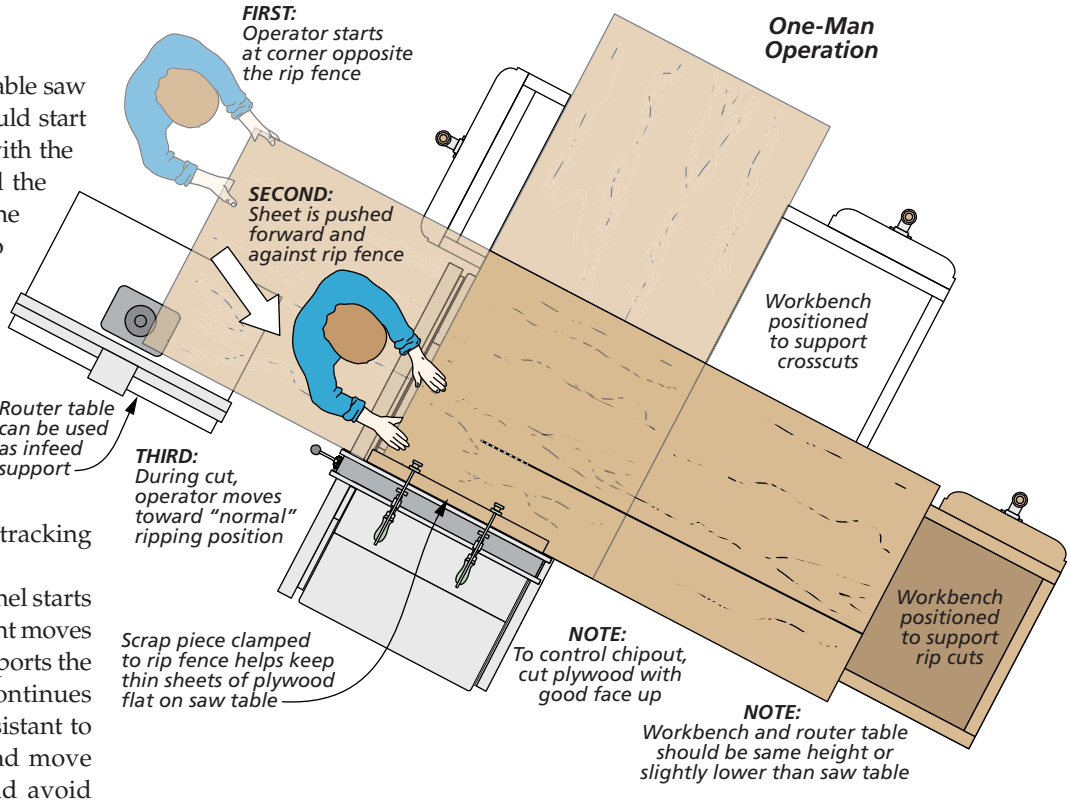

ONE-MAN TECHNIQUE

If you're working on your own, cutting a full sheet of material at the table saw becomes a little more challenging. The key is to have proper infeed, outfeed, and side support when making the cut to prevent the sheet from falling as it moves across the saw table. It can also be difficult to lift the sheet into position by yourself, but the project on page 24 of this issue can help in that effort.

The drawing above shows how you can arrange tools and fixtures that you probably already have in your shop to properly support a sheet while making rips or crosscuts. A few other options that I like for infeed, outfeed, and side support are shown in the box below.

CUT OVERSIZE. Even with the proper setup and the right technique for cutting sheet goods, it's still a good idea to make the cuts oversize rather than trying to cut parts to their final dimensions right off the bat. It's difficult to keep a large sheet perfectly aligned throughout the cut. So I like to cut it into more manageable panels. Then I cut these to final dimensions.

GREAT RESULTS. Despite their large size, breaking down sheet goods quickly and easily at your table saw doesn't have to be difficult. It just takes some space and either a helper or the right support system to get the job done effectively. W

Handy Helpers: SHEET GOOD SUPPORT OPTIONS

▲ Inexpensive roller stands are readily available at home centers and are easy to adjust for infeed, outfeed, or side support.

▲ The *Heavy-Duty Flexible Roller Stand* from *General International* offers the ultimate in support (refer to Sources on page 67).

▲ Simple, shop-built solutions are also a good option for sheet good support, such as this adjustable-height sawhorse.

tips from our shop

Shop Notes

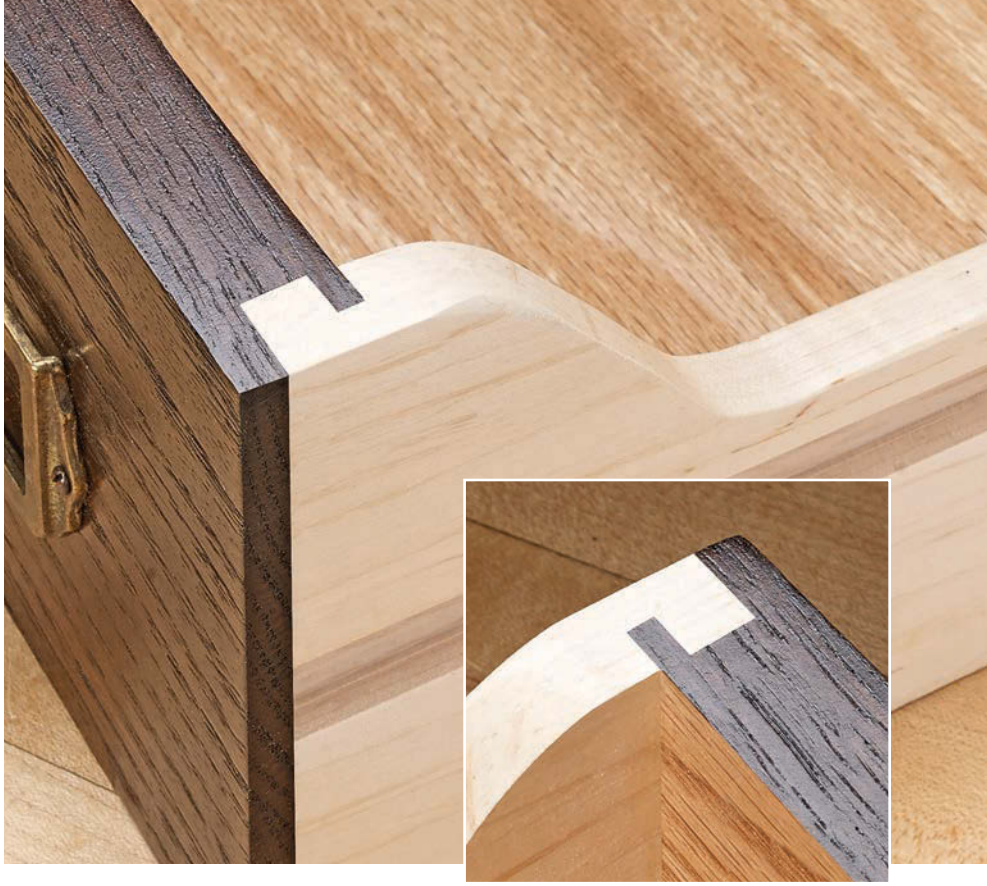

Locking Rabbet Joint

For the drawers on the card catalog cabinet on page 42, I used a locking rabbet joint at the front corners (photo above). This joint is much stronger than a simple butt or rabbet joint, and it's not as difficult to make as a dovetail joint. In fact, it only requires a couple of straight bits and a few different setups at the router table to complete.

Since the locking rabbets used on the wide and narrow drawers are identical, I cut all of the drawer fronts to final size before starting.

GROOVE. The first step is to rout a groove on the ends of all the drawer fronts. As you can see in Figures 1 and 1a below, this groove isn't centered on the end, but rather, is offset slightly. Use the router table fence to help position the workpiece properly. To avoid removing too much material at once, you'll want to make multiple passes until the groove is as deep as the side pieces are thick (½" in the case of the card catalog cabinet).

FINISH FRONTS. Using the same bit you used for the grooves, reposition the fence and trim the thin tongue on the inside face of the drawer fronts (Figure 2). Sneak up on this cut until the tongue is ¼" long.

SIDE GROOVE. All that's left is to rout the narrow dado on the inside face of the side pieces to fit over the tongue you just created on the fronts. Figure 3 provides the details. Its a good idea to use a scrap piece when setting this up. After making a test cut, check the fit with a front piece. You want the outside edges to be flush (inset photo above).

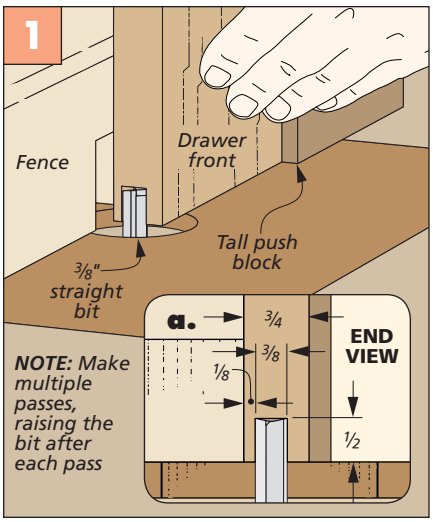

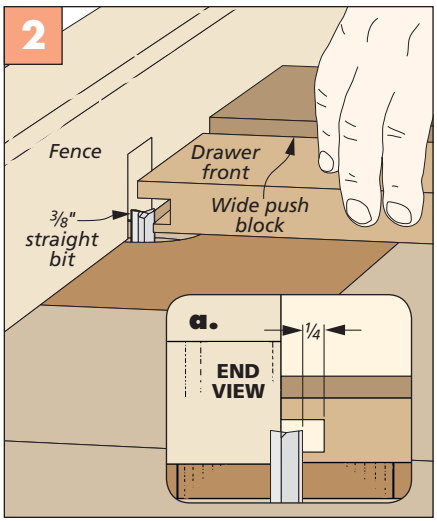

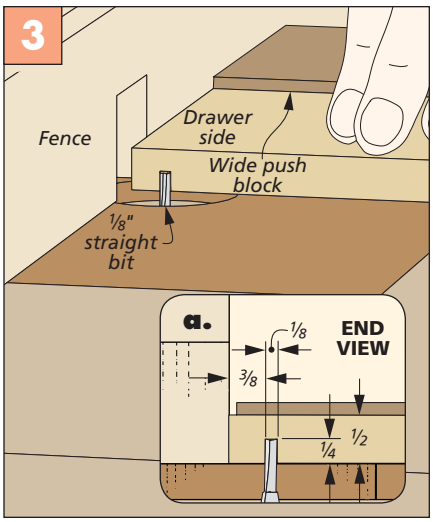

Installing Threaded Inserts

The bookends for the knock-down shelving system (page 30) slide in the openings between the shelf planks and lock in place with studded knobs and washers. In order for this to work properly, however, you first have to install a threaded insert in the underside of each bookend to accept the knob.

DRILL PRESS. Threaded inserts can be a bit tricky to drive in square, so I like to use the method below. You cut the head off a bolt and chuck it into the drill press. A pair of nuts threaded together and a washer protect the insert and workpiece from damage. Simply turn the chuck by hand and pull down on the handle to drive the insert in straight and true.

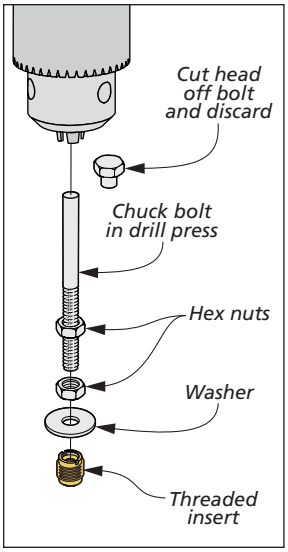

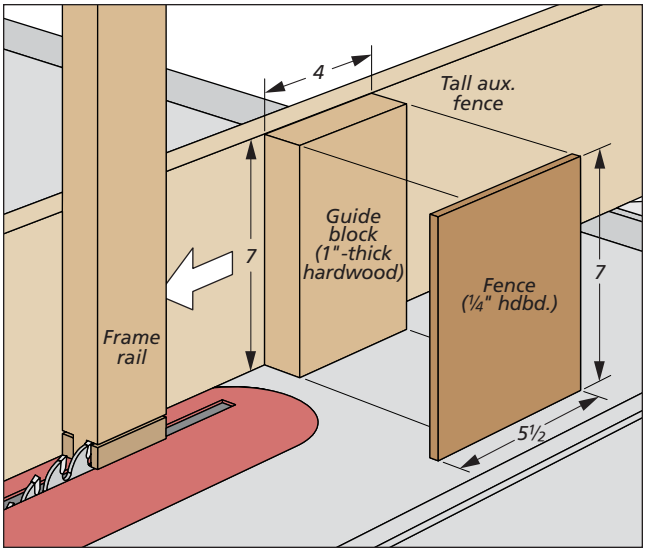

Backer Board for Stub Tenons

The knock-down shelving system features frame rails with stub tenons that are in plain view at the top of the shelves. I decided to cut the tenons in two passes at the table saw in order to achieve the cleanest cuts possible.

VERTICAL CUT. For the first pass, that simply meant cutting the tenon shoulders with the workpiece face down on the saw table. The second pass, however, required holding the pieces vertically to cut the tenon cheeks. Fortunately, this wasn't too difficult. I just made the simple backer board shown above. Paired with a tall auxiliary rip fence, it supports the rail as you pass it over the blade vertically.

Creating Duplicates

Whenever a project calls for making identical curved or irregular parts, I often use a technique that saves time and ensures perfect copies. That's the case for making the templates for the routed bowls (page 18), the cradles for the outfeed table (page 24), and the legs for the workstation (page 36).

Since it's nearly impossible to shape each part perfectly on its own, I focus my attention on just one of the pieces. With an accurate layout, careful cutting, and a little handwork, you end up with a pretty good match to the plan.

MAKE IT A TEMPLATE. Rather than go through all that effort for the other parts, use the first part as a template to shape the next. The drawings below show you the steps.

Use the completed part as a pattern to trace the shape on a blank, as shown in Figure 1. Then the next step is to remove most of the waste using a jig saw or a band saw, depending on the size of the workpiece (Figure 2). Aim to cut within 1/16" of the pencil lines.

With double-sided tape, secure the completed part to the copy and use a flush-trim bit to remove the rest of the waste (Figure 3). The result is a set of parts that match each other perfectly. W

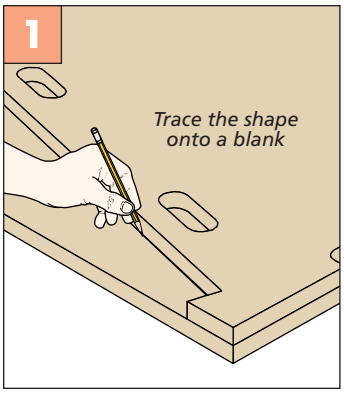

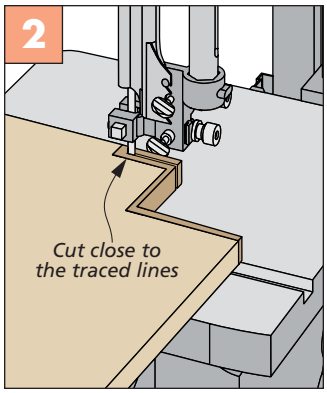

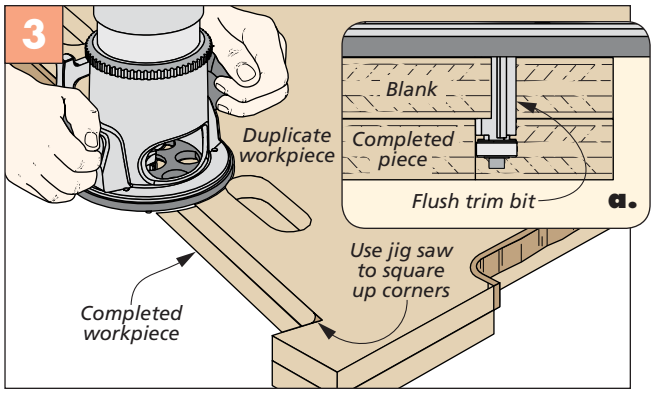

choosing Drill Bits

I've noticed that you use a few different styles of bits when drilling holes for projects in Woodsmith. How do you determine which type of bit to use in a given application?

C. J. Kingery
Spring Valley, California

There are a number of factors that go into the decision of which type of drill bit to use. The material you're drilling, the size of the hole, and even the number of holes you have to drill all play into the equation. But most of the time, there are some pretty clear guidelines when it comes to choosing a bit style. I'll try to outline them here.

BRAD POINT BITS. For the lion's share of holes, we use brad point bits (left photo below). These bits are designed specifically for drilling in wood. They feature spurs on the edges of the bit to score the perimeter of the hole, leaving a clean edge free of tearout. They also have a long, sharp centerpoint, which is helpful in aligning the bit with the desired hole location on your workpiece. Finally, they have a steep flute design to help eject chips efficiently.

FORSTNER BITS. When a project calls for a hole with a flat bottom (such as a counterbore or mortise) we'll typically use a Forstner bit. Like brad point bits, Forstner bits score the edge of the hole as they cut, leaving a clean hole (center photo below). But they remove most of the waste with a pair of straight cutting edges that shave the wood similar to a tiny hand plane. This creates a hole with an almost perfectly flat bottom.

The downside of Forstner bits is that they aren't very good at chip ejection. They have a tendency to clog when drilling deep holes, which can possibly burn the wood or ruin the edge of the hole. So when using a Forstner bit, you need to feed slowly and lift the bit out of the hole occasionally to clear it of shavings. If you have a lot of holes to drill, this can really add to your drilling time.

TWIST BITS. Brad point bits and Forstner bits are both designed for drilling in wood or soft materials like plastic. If you have occasion to drill holes in metal, you'll need yet another style of bit — a twist bit. These bits are ground to drill clean holes in both ferrous and non-ferrous metals (lower right photo). They'll work in wood, but they don't leave as clean of an edge as either brad point bits or Forstner bits.

However, there's one situation where twist bits are useful in woodworking, and that's when you need to drill an "in-between" size hole. Brad points and Forstner bits are usually available only in $\frac{1}{16}$" increments. So if I have to drill a $\frac{9}{32}$"-dia. hole, for example, I turn to a twist bit.

Although it may seem like you need to outfit your shop with a lot of different bits, the good news is that you don't need to buy them all at once. A good set of brad point bits will get you started, and then you can add additional bits or sets of bits as you need them. W

For quickly drilling clean, tearout-free holes in wood, it's hard to beat a quality set of brad point bits.

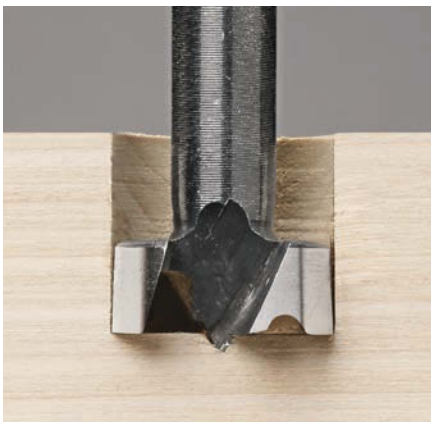

A Forstner bit excels at drilling a flat-bottom hole. Since it's guided by the rim of the bit, it can drill overlapping holes.

For drilling holes in metal, a twist bit is the correct choice. They're readily available in a wide range of sizes.

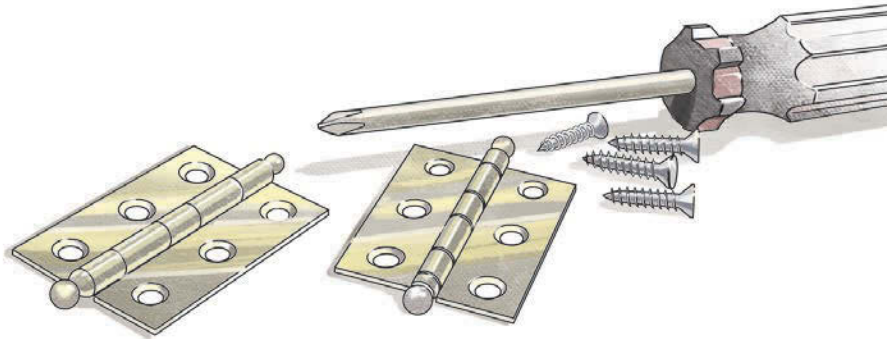

hardware & supplies Sources

Most of the materials and supplies you'll need to build the projects are available at hardware stores or home centers. For specific products or hard-to-find items, take a look at the sources listed here. You'll find each item and part number listed below the company name. Refer to the right margin for supplier contact information.

LATCHES & CATCHES *(p.10)*

- **House of Antique Hardware**
  Cup. Latch. . . . R-08BM-1619-OB
  Icebox Latch. . . R-08BM-1506-PB
- **Lee Valley**
  Bar Latch. 00L08.10
  Mag. Touch Latch. . . . 00W02.02
  Double-Ball Catch . . . 00W12.04
  Bullet Catch 00G11.02

TENONING JIG *(p.14)*

The *Powermatic* tenoning jig is available from a number of different online retailers, including *Amazon* and *Woodcraft*.

ROUTED BOWLS *(p.18)*

- **McMaster-Carr**
  Star Knobs. 5993K66
- **Amana Tool**
  Panel Raising Bit 54524
- **Woodcraft**
  Bowl & Tray Bit 825834

Two of the bowls were finished with a couple of coats of oil for protection and to showcase the natural grain of the wood. The painted bowl was finished with *General Finishes* milk paint. The outside is "Tuscan Red," and the inside is "Antique White."

OUTFEED TABLE *(p.24)*

- **McMaster-Carr**
  3" Casters 78155T13
  3" Knobs 5993K93
  Threaded Rod 90034A033
  T-Nuts. 90975A033
  Swivel Mounts 6103K174
- **Nevamar**
  Lam. (Maritime Gray) S6027

The non-laminated portions of the table were sprayed with two coats of lacquer.

KNOCK-DOWN SHELVING *(p.30)*

- **Rockler**
  ¼"-20 Threaded Inserts . . .33183
  1" Knob w/1" Stud 34238

The shelving unit was finished with two coats of lacquer.

THREADING JIG *(p.36)*

- **MSD Supply**
  Double Angle Cutter. . . .8511982
- **Lee Valley**
  V-Groove Bit. 16J13.08
- **McMaster-Carr**
  2" Star Knobs 5993K66
  1½" Star Knobs 5993K64

The threading jig was finished with two coats of lacquer.

CARD CATALOG *(p.42)*

- **Van Dyke's Restorers**
  Label Holder w/Pull . . .02015612
- **Lee Valley**
  Brass Knobs 01A06.17
  Shelf Braces. 00S23.70

The card catalog was stained with *General Finishes* water-based stain in "Espresso." It was then sprayed with two coats of lacquer.

POCKET HOLE JOINERY *(p.52)*

- **Kreg Tool**
  K5 Jig K5
  Kreg Foreman DB210
  Kreg Jig HD . . . . . KJHD
  Plug Cutting Kit . . . . . KPCS

CORDLESS TOOLS *(p.58)*

You'll find a wide variety of cordless tools, including the items discussed in the article, at most home centers. They're also available from a number of different online vendors, such as *Amazon* and *Woodcraft*.

CUTTING SHEET GOODS *(p.62)*

- **Home Depot**
  Flexible Roller Stand . . . 50-167S

Woodsmith SHOP TV SHOW NOW

- Stream all past, present, and future episodes of the Woodsmith Shop TV Show.
- Watch 117 full episodes now, plus new epsiodes even before they air on public TV!
- Ready when you are, wherever you are — on your computer, tablet, phone, or TV!

WoodsmithShop TVShowNow.com

MAIL ORDER SOURCES

Project supplies may be ordered from the following companies:

Amana Tool
877-676-0077
amanatool.com

amazon.com

General Finishes
generalfinishes.com

Home Depot
homedepot.com

House of Antique Hardware
888-223-2545
houseofantiquehardware.com

Kreg Tool
800-447-8638
kregtool.com

Lee Valley
800-871-8158
leevalley.com

McMaster-Carr
630-833-0300
mcmaster.com

MSD Supply
201-518-8472
msdiscount.com

Nevamar
877-726-6526
nevamar.com

Rockler
800-279-4441
rockler.com

Van Dyke's Restorers
866-279-4302
vandykes.com

Woodcraft
800-225-1153
woodcraft.com

looking inside
Final Details

► *Card Catalog Cabinet.* Inspired by once-common library card catalogs, this storage cabinet is made more useful by the fact that we've designed it with two different sizes of drawers. We'll walk you through the complete building process beginning on page 42.

▼ *Outfeed Table.* The unique design of this table saw outfeed table allows it to do double-duty as a panel lift, helping to take the strain off your back when working with sheet goods. Step-by-step plans start on page 24.

▼ *Shelving System.* Perfect for just about any room of the house, this knock-down shelving unit offers plenty of storage space for books or other items. Complete plans for building it begin on page 30.

▲ *Routed Bowls.* Although they look hand-carved, these bowls were actually created with a router and a simple, shop-made jig. Once you have the jig made, you can crank out a bowl in just a couple of hours. Turn to page 18 to learn more about the process.